www.jjbcn.com

J.J. BCN INTERNACIONAL, S.A.

J4C

HANDBOOK

HANDBOOK 21/08 V1

INDEX

- 01. Actuator Part List
  - S20, S35, S55, S85, B20, B35, B55, B85, H20, H35, H55 & H85
  - S140, S300, B140, B300, H140 & H300
- 02. J4C Series
  - Voltage
  - Electrical Connectors
  - ID Actuator Label
  - Local Visual Position Indicator
  - Emergency Manual Override Facility
  - Adjustment of the Cams
  - Table of Consumptions
  - External Connecting Diagram
  - Actuator Operational Status
- 03. Datasheet
  - J4C 20
  - J4C 35
  - J4C 55
  - J4C 85
  - J4C 140
  - J4C 300
- 04. Options
  - DPS
  - BSR
  - Bluetooth & Wifi
  - Modbus
- 05. Kits
  - DPS
  - BSR
  - INTERFACE
- 06. Certifications
- 07. Guarantee
- 08. Contact

01 ACTUATOR PART LIST

MODELS: S20, S35, S55, S85, B20, B35, B55, B85, H20, H35, H55 & H85

MODELS: S140, S300, B140, B300, H140 & H300

02 J4C SERIES

READ THESE INSTRUCTIONS BEFORE CONNECTING THE ACTUATOR. DAMAGE CAUSED BY NON COMPLIANCE OF THESE INSTRUCTIONS IS NOT COVERED BY OUR WARRANTY.

J4C Electric actuators operate with the use of live electricity. It is recommended that only qualified electrical engineers be allowed to connect or adjust these actuators.

VOLTAGE TO BE CONNECTED

All our actuators model S20 to S300 are ready to work from 24-240VAC / 24-135VDC.
All our actuators model B20 to B300 are ready to work at 12 VDC/VAC ONLY.
All our actuators model H20 to H300 are ready to work from 85-240VAC/VDC.

ELECTRICAL CONNECTORS

Warning: Before connecting ensure that the voltage to be applied to the actuator is within the range shown on the identification label. The supplied electrical connectors, used to connect to the actuator are DIN plugs. Ensure the diameter of cable to be used conforms to the maximum and minimum requirements of the DIN plugs to maintain water tightness (Fig.1).

CONNECTOR	SMALL BLACK		BIG GREY or BLACK	
	DIN43650/C		EN175301-803 FORM A	
MODEL	min Ø	máx. Ø	min Ø	máx. Ø
J4C 20 a 300	5mm	6mm	8mm	10,5mm

Warning: Ensure that the square rubber seal is in place when fixing each DIN plug to the actuator. Failure to do so could allow water ingress and damage caused by this installation error will invalidate any warranty. The DIN plugs are fixed to their respective bases on the actuator housing with a screw. Do not over tight the screw (8) when assembling (Max. 0.5Nm).

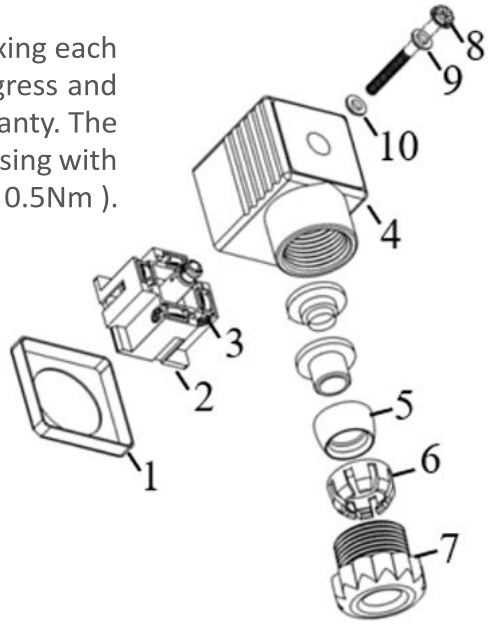

1. Gasket
2. Terminal strip
3. Cable fixing screws
4. Housing
5. Washer
6. Grommet
7. Gland - nut
8. Fixing screw
9. Washer
10. Gasket

ID ACTUATOR LABEL

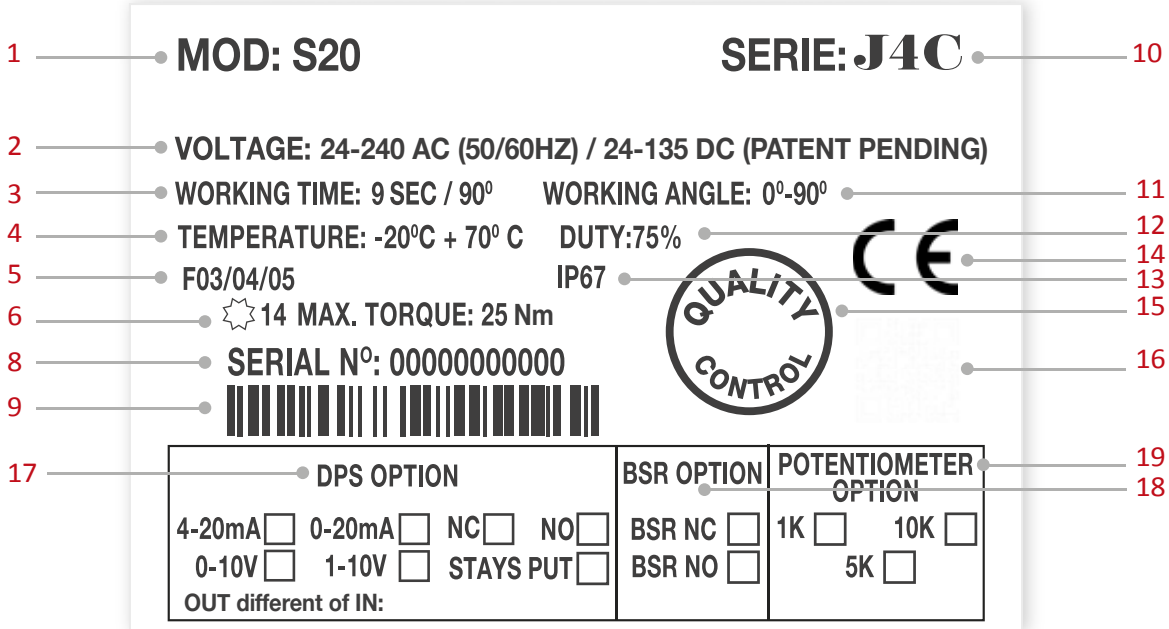

1 - Actuator Model.
2 - Voltage to be connected.
3 - Time the actuator needs to run to the indicated degrees.
4 - Actuator ready to bear between –20ºC & + 70ºC.
5 - Plate to fix the valve to the actuator, following ISO 5211.
6 - Female output drive size, following DIN3337.
7 - Maximum torque break.
8 - Actuator serial number.
9 - Bar code of the serial number.
10 - Actuator Series.
11 - Working angle.
12 - Duty: 75%. Example: S20 Model - Maneuver time = 10sec. Time between maneuvers = 3.3 sec.
13 - Actuator with the IP67 protection.
14 - Actuator with the CE certificate.
15 - Quality Control Conformity .
16 - QR code for manufacturing.
17 - DPS options.
18 - BSR options.
19 - POTENTIOMETER options.

LOCAL VISUAL POSITION INDICATOR

All **J4C actuators** are supplied with a local visual position indicator comprises a black base with a yellow insert that shows, both the position and direction of rotation **(Fig.6)**. The open and close positions have the following logos molded into the top cover OPEN 90 and CLOSE 0.
Opening = **Closing =**

Fig. 6 0 = CLOSE

Fig. 6 90 = OPEN

LOCAL VISUAL POSITION INDICATOR

TWO YELLOW INDICATORS:
For 3 way ball valve, **L** port.

THREE YELLOW INDICATORS:
For 3 way ball valve, **T** port.

EMERGENCY MANUAL OVERRIDE FACILITY:

The **J4C** has 2 operating modes, automatic and manual, the required mode is selected by using a lever on the lower half of the actuator housing (Fig 7).

The 2 positions are marked:
AUTO = Automatic operation
MAN = Manual operation

Warning: Do not remove the selector lever securing screw, as this will allow its internal mechanism to become loose and will cause irreparable damage to the actuator's gearbox.
Removing this screw will invalidate the warranty.

When **"AUTO"** position is selected:
The hand wheel, of models 20,35,55, and 85 rotates automatically, it is very important not to block it, otherwise the actuator could suffer unrepairable damages.

Fig. 7 **J4C 20 TO 85**

Fig. 7 **J4C 140 TO 300**

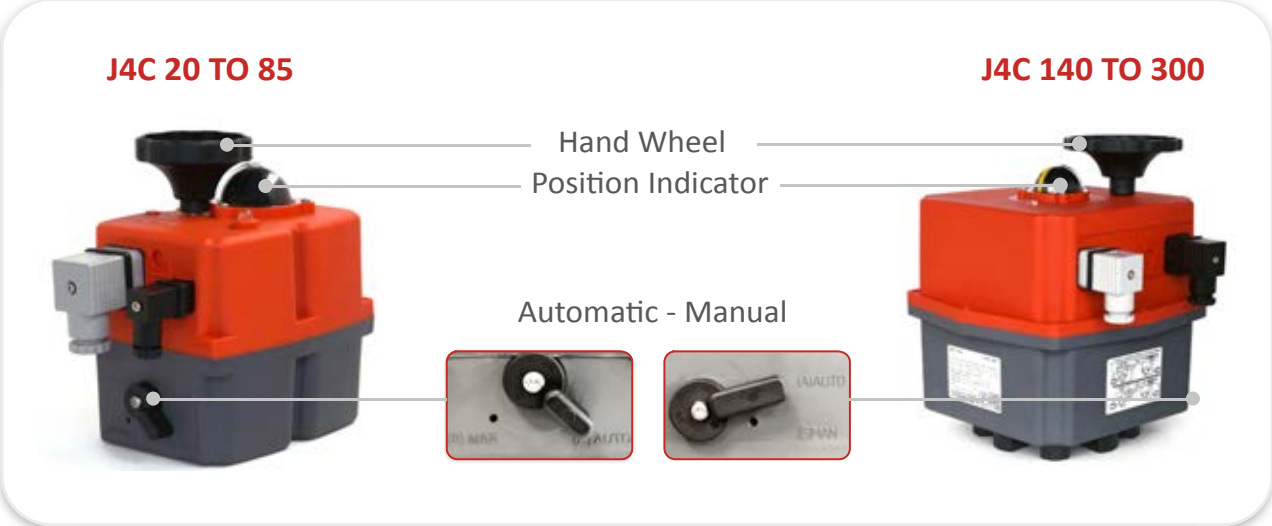

When **"MAN"** function is selected:

1 - The electronic system cuts the power to the motor after a few minutes.

2 - The mechanical connection between the motor and the output shaft is disconnected.

3 - The desired position can be achieved by using the hand wheel.

4 - There are two ways to re-active the motor after being isolated whilst in "MAN" position:

a) With the actuator in "MAN" function, turn the hand wheel to one of the end positions (open or close). If the end position switch is activated the motor stops. Now change the manual override from "MAN" to "AUTO" , and the actuator is ready to operate automatically again.

b) Change from "MAN" mode to "AUTO". Deactivate the supply voltage for a few seconds which resets the actuator and it could operate automatically again.

ADJUSTMENT OF THE CAMS

¡WARNING! RISK OF ELECTRIC SHOCK INSIDE THE ACTUATOR. AUTHORIZED PERSONNEL ONLY

Under normal conditions, the actuator may only be operated with the closed cover. If work is performed on the actuator with the removed cover, the supply and control voltage must first be disconnected. Adjustments, which need to be done in the energized state, should be carried out with special insulated tools.

How to do it: Tolling: One special plastic wrench (is supplied together with the actuator). The wrench is tied together with the motor by using one plastic clamp.

To move the cams, introduce the special plastic wrench in the hole of the cam and turn it round (see both options on the enclosed pictures).

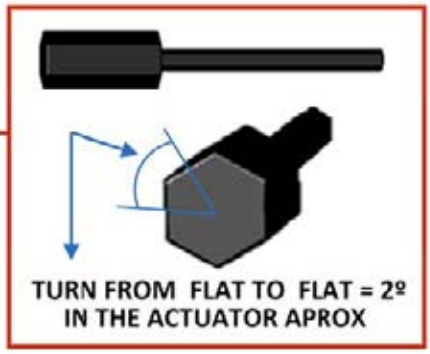

POSITION OF THE CAMS

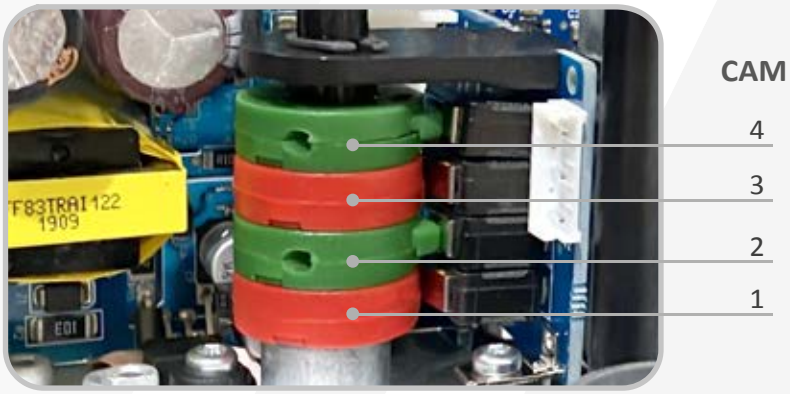

Cams 1 and 3

Cams 2 and 4

Cam 1
cam 2
cam 3

1) Cam **1** is to adjust the close position.
2) Cam **2** is to adjust the open position.
3) Cam **3** is to adjust the close position confirmation.
4) Cam **4** is to adjust the open position confirmation.

To ensure that the position confirmation works, adjust the confirmation cams (3 & 4) 3° (+/-1º) before the motor stop.

The standard actuators are always adjusted at 0º (close) and 90º (open).

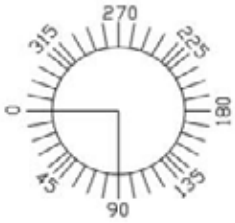

1) To adjust the close position at less than 0⁰.

Turn the wrench to clockwise direction - cams 1 and 3.

The cam 3 (confirmation) should press the lever of the micro switch a bit earlier than the cam 1.

cams 1 / 3

2) To adjust the close position at more than 0⁰.

Turn the wrench to anti-clockwise direction - cams 1 and 3.

The cam 3 (confirmation) should press the lever of the micro switch a bit earlier than the cam 1.

cams 1 / 3

3) To adjust the open position to more than 90⁰.

Turn the wrench to anti-clockwise direction - cams 2 and 4.

The cam 4 (confirmation) should press the lever of the micro switch a bit earlier than the cam 2.

cams 2 / 4

4) To adjust the open position to less than 90⁰.

Turn the wrench to clockwise direction - cams 2 and 4.

The cam 4 (confirmation) must press the lever of the micro switch a bit earlier than the cam 2.

cams 2 / 4

TABLE OF CONSUMPTIONS - ON-OFF ACTUATOR

J4C 20 Consumption		Unload		Max. Operational Torque 20Nm		Max. Torque Break 25Nm	
Voltage	Model	A	W	A	W	A	W
12 VDC	B20	0,75	9,06	1,80	21,60	1,95	23,36
24 VDC	S20	0,45	10,77	0,90	21,49	0,97	23,39
48 VDC	S20	0,21	9,93	0,42	20,38	0,46	22,07
110 VDC	S20 / H20	0,07	8,00	0,13	14,30	0,14	15,70
12 VAC	B20	1,04	12,51	1,85	22,18	2,28	27,32
24 VAC	S20	0,59	14,20	1,12	26,77	1,28	30,62
48 VAC	S20	0,34	16,37	0,69	33,16	0,75	36,22
110 VAC	S20 / H20	0,14	15,73	0,27	29,52	0,30	32,67
240 VAC	S20 / H20	0,10	23,76	0,15	36,43	0,16	39,07

J4C 35 Consumption		Unload		Max. Operational Torque 35Nm		Max. Torque Break 38Nm	
Voltage	Model	A	W	A	W	A	W
12 VDC	B35	0,75	9,06	2,38	28,62	2,62	31,50
24 VDC	S35	0,45	10,77	1,28	30,78	1,37	32,79
48 VDC	S35	0,21	9,93	0,56	26,72	0,59	28,20
110 VDC	S35 / H35	0,07	7,70	0,17	18,90	0,18	20,10
12 VAC	B35	1,04	12,51	2,75	33,00	3,19	38,28
24 VAC	S35	0,59	14,20	1,58	37,80	1,67	40,13
48 VAC	S35	0,34	16,37	0,92	44,04	0,99	47,31
110 VAC	S35 / H35	0,14	15,73	0,36	39,45	0,38	41,87
240 VAC	S35 / H35	0,10	23,76	0,19	45,41	0,20	47,52

J4C 55 Consumption		Unload		Max. Operational Torque 55Nm		Max. Torque Break 60Nm	
Voltage	Model	A	W	A	W	A	W
12 VDC	B55	0,70	8,45	3,04	36,43	3,42	41,05
24 VDC	S55	0,42	10,19	1,55	37,17	1,63	39,02
48 VDC	S55	0,20	9,72	0,61	29,25	0,67	32,31
110 VDC	S55 / H55	0,07	7,50	0,19	20,80	0,21	23,20
12 VAC	B55	0,94	11,30	3,43	41,18	3,78	45,41
24 VAC	S55	0,58	13,89	1,87	44,88	1,98	47,52
48 VAC	S55	0,33	15,73	1,10	52,80	1,21	58,29
110 VAC	S55 / H55	0,14	15,73	0,40	43,80	0,43	46,95
240 VAC	S55 / H55	0,09	22,70	0,20	47,52	0,21	50,16

TABLE OF CONSUMPTIONS - ON-OFF ACTUATOR

J4C 85 Consumption		Unload		Max. Operational Torque -85Nm		Max. Torque Break -90Nm	
Voltage	Model	A	W	A	W	A	W
12 VDC	B85	0,62	7,42	2,11	25,34	2,28	27,32
24 VDC	S85	0,36	8,55	1,08	25,87	1,22	29,30
48 VDC	S85	0,17	8,24	0,48	22,92	0,53	25,56
110 VDC	S85/H85	0,05	5,80	0,14	15,20	0,16	17,90
12 VAC	B85	0,81	9,69	2,38	28,51	2,65	31,81
24 VAC	S85	0,50	11,88	1,36	32,74	1,50	36,01
48 VAC	S85	0,25	11,83	0,77	37,07	0,86	41,18
110 VAC	S85/H85	0,12	12,83	0,31	33,64	0,33	36,54
240 VAC	S85/H85	0,08	20,06	0,17	40,13	0,18	42,77

J4C 140 Consumption		Unload		Max. Operational Torque 140Nm		Max. Torque Break 170Nm	
Voltage	Model	A	W	A	W	A	W
12 VDC	B140	1,93	23,10	4,73	56,76	5,39	64,68
24 VDC	S140	0,66	15,84	2,15	51,48	2,53	60,72
48 VDC	S140	0,30	14,25	0,88	42,24	1,10	52,80
110 VDC	S140/H140	0,10	10,89	0,28	30,25	0,39	42,35
12 VAC	B140	2,75	33,00	6,60	79,20	8,47	101,64
24 VAC	S140	0,83	19,80	2,59	62,04	3,30	79,20
48 VAC	S140	0,48	23,23	1,43	68,64	1,79	86,06
110 VAC	S140/H140	0,23	25,41	0,63	68,97	0,72	78,65
240 VAC	S140/H140	0,18	42,24	0,39	90,40	0,44	105,60

J4C 300 Consumption		Unload		Max. Operational Torque 300Nm		Max. Torque Break 350Nm	
Voltage	Model	A	W	A	W	A	W
12 VDC	B300	1,32	15,84	5,17	62,04	5,45	65,34
24 VDC	S300	0,50	11,88	2,31	55,44	2,70	64,68
48 VDC	S300	0,22	10,56	1,10	52,80	1,19	57,02
110 VDC	S300 / H300	0,09	9,68	0,33	36,30	0,39	42,35
12 VAC	B300	1,98	23,76	7,26	87,12	8,64	103,62
24 VAC	S300	0,66	15,84	2,75	66,00	3,30	79,20
48 VAC	S300	0,36	17,42	1,65	79,20	1,87	89,76
110 VAC	S300 / H300	0,19	20,57	0,66	72,60	0,77	84,70
240 VAC	S300 / H300	0,15	36,96	0,42	100,32	0,47	113,52

TABLE OF CONSUMPTIONS - DPS ACTUATOR

J4C 20 Consumption		Unloaded		Max. Operational Torque 20Nm		Max. Torque Break 25Nm	
Voltage	Model	DPS		DPS		DPS	
		A	W	A	W	A	W
12 VDC	B20	0,84	10,08	2,02	24,19	2,18	26,21
24 VDC	S20	0,50	12,10	1,01	24,19	1,09	26,07
48 VDC	S20	0,24	11,29	0,47	22,58	0,52	24,73
110 VDC	S20	0,08	8,62	0,15	16,02	0,16	17,25
12 VAC	B20	1,16	13,98	2,07	24,86	2,55	30,64
24 VAC	S20	0,66	15,86	1,25	30,11	1,43	34,41
48 VAC	S20	0,38	18,28	0,77	37,09	0,84	40,32
110 VAC	S20	0,16	17,25	0,30	33,26	0,34	36,96
240 VAC	S20	0,11	26,88	0,17	40,32	0,18	43,01

J4C 35 Consumption		Unloaded		Max. Operational Torque 35Nm		Max. Torque Break 38Nm	
Voltage	Model	DPS		DPS		DPS	
		A	W	A	W	A	W
12 VDC	B35	0,84	10,08	2,67	31,99	2,93	35,21
24 VDC	S35	0,50	12,10	1,43	34,41	1,53	36,83
48 VDC	S35	0,24	11,29	0,63	30,11	0,66	31,72
110 VDC	S35	0,08	8,62	0,19	20,94	0,20	22,18
12 VAC	B35	1,16	13,98	3,08	36,96	3,57	42,87
24 VAC	S35	0,66	15,86	1,77	42,47	1,87	44,89
48 VAC	S35	0,38	18,28	1,03	49,46	1,11	53,22
110 VAC	S35	0,16	17,25	0,40	44,35	0,43	46,82
240 VAC	S35	0,11	26,88	0,21	51,07	0,22	53,76

J4C 55 Consumption		Unloaded		Max. Operational Torque 55Nm		Max. Torque Break 60Nm	
Voltage	Model	DPS		DPS		DPS	
		A	W	A	W	A	W
12 VDC	B55	0,78	9,41	3,40	40,86	3,83	45,96
24 VDC	S55	0,47	11,29	1,74	41,66	1,83	43,81
48 VDC	S55	0,22	10,75	0,68	32,79	0,75	36,02
110 VDC	S55	0,08	8,62	0,21	23,41	0,24	25,87
12 VAC	B55	1,05	12,63	3,84	46,10	4,23	50,80
24 VAC	S55	0,65	15,59	2,09	50,27	2,22	53,22
48 VAC	S55	0,37	17,74	1,23	59,14	1,36	65,05
110 VAC	S55	0,16	17,25	0,45	49,28	0,48	52,98
240 VAC	S55	0,10	24,19	0,22	53,76	0,24	56,45

TABLE OF CONSUMPTIONS - DPS ACTUATOR

J4C 85 Consumption		Unloaded		Max. Operational Torque 85Nm		Max. Torque Break 90Nm	
Voltage	Model	DPS		DPS		DPS	
		A	W	A	W	A	W
12 VDC	B85	0,69	8,33	2,36	28,36	2,55	30,64
24 VDC	S85	0,40	9,68	1,21	29,03	1,37	32,79
48 VDC	S85	0,19	9,14	0,54	25,80	0,59	28,49
110 VDC	S85	0,06	6,16	0,16	17,25	0,18	19,71
12 VAC	B85	0,91	10,89	2,67	31,99	2,97	35,62
24 VAC	S85	0,56	13,44	1,52	36,56	1,68	40,32
48 VAC	S85	0,28	13,44	0,86	41,40	0,96	46,23
110 VAC	S85	0,13	14,78	0,35	38,19	0,37	40,66
240 VAC	S85	0,09	21,50	0,19	45,70	0,20	48,38

J4C 140 Consumption		Unloaded		Max. Operational Torque 140Nm		Max. Torque Break 170Nm	
Voltage	Model	DPS		DPS		DPS	
		A	W	A	W	A	W
12 VDC	B140	2,16	25,94	5,30	63,57	6,04	72,44
24 VDC	S140	0,74	17,74	2,41	57,79	2,83	68,01
48 VDC	S140	0,34	16,13	0,99	47,31	1,23	59,14
110 VDC	S140	0,11	12,32	0,31	34,50	0,44	48,05
12 VAC	B140	3,08	36,96	7,39	88,70	9,49	113,84
24 VAC	S140	0,93	22,31	2,90	69,62	3,70	88,70
48 VAC	S140	0,54	25,80	1,60	76,88	2,00	96,23
110 VAC	S140	0,26	28,34	0,71	77,62	0,81	88,70
240 VAC	S140	0,20	48,38	0,44	104,83	0,49	118,27

J4C 300 Consumption		Unloaded		Max. Operational Torque 300Nm		Max. Torque Break 350Nm	
Voltage	Model	DPS		DPS		DPS	
		A	W	A	W	A	W
12 VDC	B300	1,48	17,74	5,79	69,48	6,10	73,25
24 VDC	S300	0,56	13,44	2,59	62,09	3,02	72,58
48 VDC	S300	0,25	11,83	1,23	59,14	1,33	63,97
110 VDC	S300	0,10	11,09	0,37	40,66	0,44	48,05
12 VAC	B300	2,22	26,61	8,13	97,57	9,68	116,1
24 VAC	S300	0,74	17,74	3,08	73,92	3,70	88,70
48 VAC	S300	0,40	19,35	1,85	88,70	2,09	100,53
110 VAC	S300	0,21	23,41	0,74	81,31	0,86	94,86
240 VAC	S300	0,17	40,32	0,47	112,90	0,53	126,34

EXTERNAL CONNECTING DIAGRAM (STANDARD)

J4C 20/85

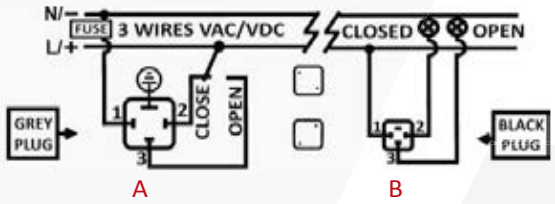

J4C 140/300

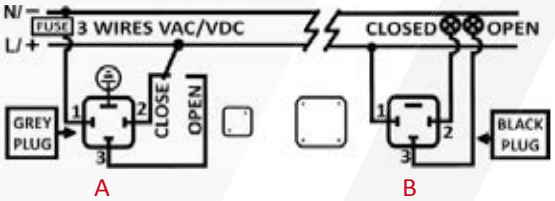

STANDARD MODE · 3 WIRES ON - OFF

A = Power supply plug

A: VAC 3 WIRES (Grey plug)
- PIN 1 = Neutral + PIN 2 = Phase = Close
- PIN 1 = Neutral + PIN 3 = Phase = Open

A: VDC 3 WIRES (Grey plug)
- PIN 1 = (-) Negative + PIN 2 = (+) Positive = Close
- PIN 1 = (-) Negative + PIN 3 = (+) Positive = Open

B = Volt free contact, plug
- PIN 1 / PIN 2 = Close
- PIN 1 / PIN 3 = Open

J4C 20/85

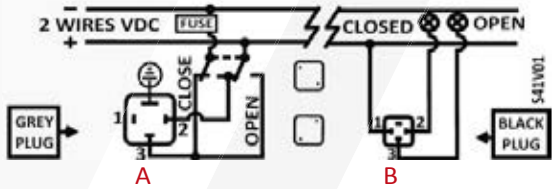

J4C 140/300

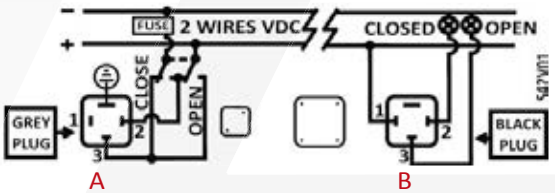

STANDARD MODE · 2 WIRES ON - OFF

A = Power supply plug

A: VDC 2 WIRES (Grey plug)
- PIN 2 = (+) Positive + PIN 3 = (-) Negative = Close
- PIN 2 = (-) Negative + PIN 3 = (+) Positive = Open

B = Volt free contact plug
- PIN 1 / PIN 2 = Close
- PIN 1 / PIN 3 = Open

J4C 20/85

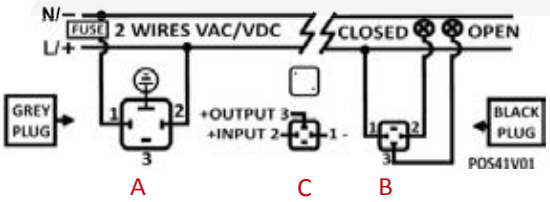

J4C 140/300

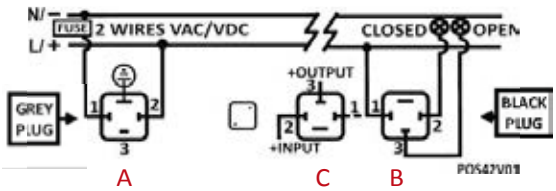

POSITIONER

A = Power supply plug

A: VAC 2 WIRES (Grey plug)
- PIN 1 = Neutral + PIN 2 = Phase = Power supply plug

A: VDC 2 WIRES (Grey plug)
- PIN1=(-) Negative + PIN 2=(+) Positive = Power supply plug

B = Volt free contact plug
- PIN 1 / PIN 2 = Closed
- PIN 1 / PIN 3 = Open

C = Instrumentation Signal

C: Input signal : 4/20mA or 0/10V
- PIN 1 = (-) Negative + PIN 2 = (+) Positive = Input signal
- PIN 1 = (-) Negative + PIN 3 = (+) Positive = Output signal

INSTRUMENTATION SIGNAL
NO VOLTAGE

EXTERNAL CONNECTING DIAGRAM (OPTIONAL)

J4C 20/85

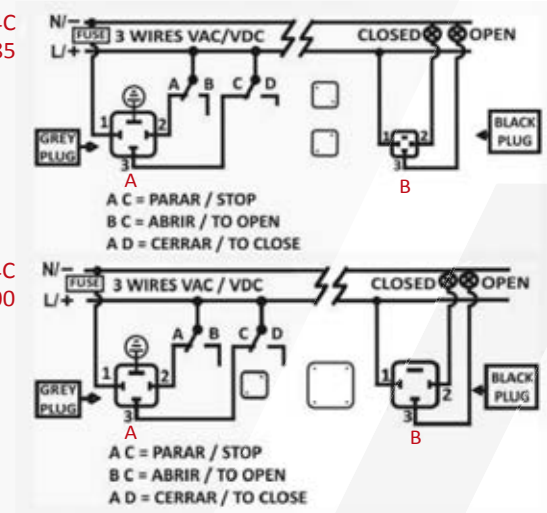

J4C 140/300

STANDARD MODE · 3 WIRES ON - OFF

A = Power supply plug

A: VAC 3 WIRES (Grey plug)
- PIN 1 = Neutral + PIN 2 = Phase = Close
- PIN 1 = Neutral + PIN 3 = Phase = Open
- PIN 1 = Neutral + PIN 2+3 = Phase = Stop

A: VDC 3 WIRES (Grey plug)
- PIN 1 = (-) Negative + PIN 2 = (+) Positive = Close
- PIN 1 = (-) Negative + PIN 3 = (+) Positive = Open
- PIN 1 = (-) Negative + PIN 2+3 = (+) Positive = Stop

B = Volt free contact, plug
- PIN 1 / PIN 2 = Close
- PIN 1 / PIN 3 = Open

Other options for external connection diagrams:
These options can be configured by the manufacturer or can be configured by the customer, using our J4C interface kit.

J4C 20/85

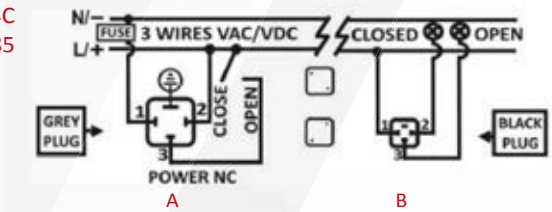

J4C 140/300

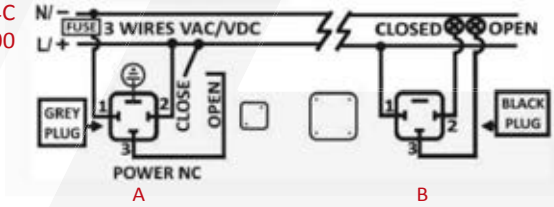

2 MODE ON - OFF

A = Power supply plug

A: VAC 3 WIRES (Grey plug)
- PIN 1 = Neutral + PIN 2 = Phase = Close
- PIN 1 = Neutral + PIN 2+3 = Phase = Open

A: VDC 3 WIRES (Grey plug)
- PIN 1 = (-) Negative + PIN 2 = (+) Positive = Close
- PIN 1 = (-) Negative + PIN 2+3 = (+) Positive = Open

B = Volt free contact plug
- PIN 1 / PIN 2 = Close
- PIN 1 / PIN 3 = Open

J4C 20/85

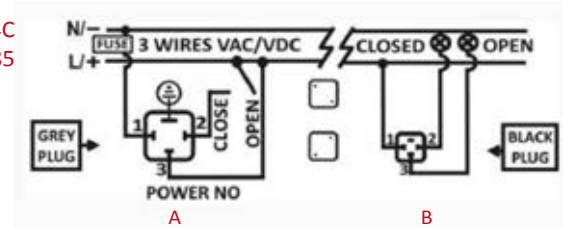

J4C 140/300

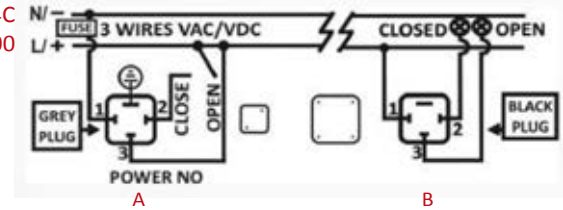

3 MODE ON - OFF

A = Power supply plug

A: VAC 3 WIRES (Grey plug)
- PIN 1 = Neutral + PIN 2+3 = Phase = Close
- PIN 1 = Neutral + PIN 3 = Phase = Open

A: VDC 3 WIRES (Grey plug)
- PIN 1 = (-) Negative + PIN 2+3 = (+) Positive = Close
- PIN 1 = (-) Negative + PIN 3 = (+) Positive = Open

B = Volt free contact plug
- PIN 1 / PIN 2 = Closed
- PIN 1 / PIN 3 = Open

EXTERNAL CONNECTING DIAGRAM (OPTIONAL)

J4C 20/85

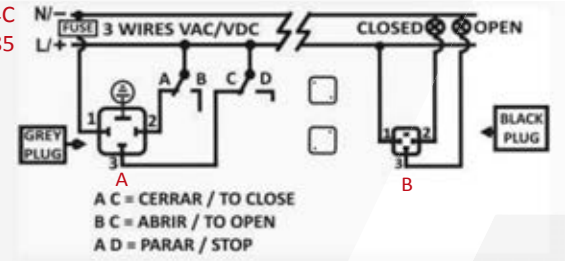

J4C 140/300

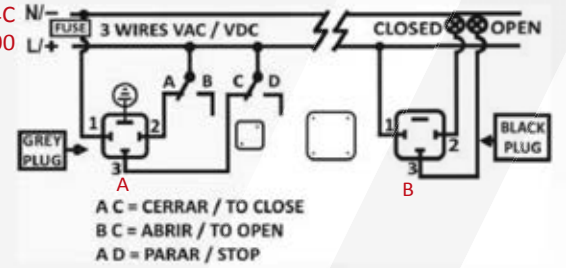

4 MODE ON - OFF

A = Power supply plug

A: VAC 3 WIRES (Grey plug)
- PIN 1 = Neutral + PIN 2 = Phase = Stop
- PIN 1 = Neutral + PIN 3 = Phase = Open
- PIN 1 = Neutral + PIN 2+3 = Phase = Close

A: VDC 3 WIRES (Grey plug)
- PIN 1 = (-) Negative + PIN 2 = (+) Positive = Stop
- PIN 1 = (-) Negative + PIN 3 = (+) Positive = Open
- PIN 1 = (-) Negative + PIN 2+3 = (+) Positive = Close

B = Volt free contact, plug
- PIN 1 / PIN 2 = Close
- PIN 1 / PIN 3 = Open

J4C 20/85

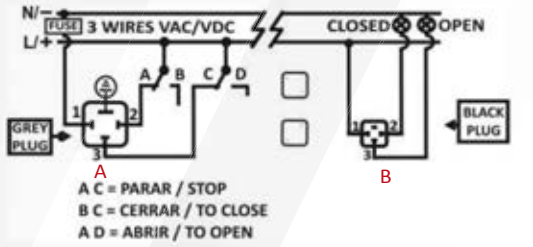

J4C 140/300

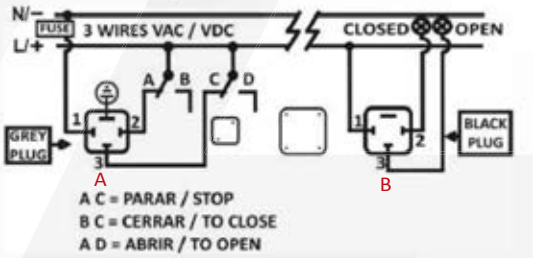

6 MODE ON - OFF

A = Power supply plug

A: VAC 3 WIRES (Grey plug)
- PIN 1 = Neutral + PIN 2 = Phase = Open
- PIN 1 = Neutral + PIN 3 = Phase = Close
- PIN 1 = Neutral + PIN 2+3 = Phase = Stop

A: VDC 3 WIRES (Grey plug)
- PIN 1 = (-) Negative + PIN 2 = (+) Positive = Open
- PIN 1 = (-) Negative + PIN 3 = (+) Positive = Close
- PIN 1 = (-) Negative + PIN 2+3 = (+) Positive = Stop

B = Volt free contact plug
- PIN 1 / PIN 2 = Close
- PIN 1 / PIN 3 = Open

J4C 20/85

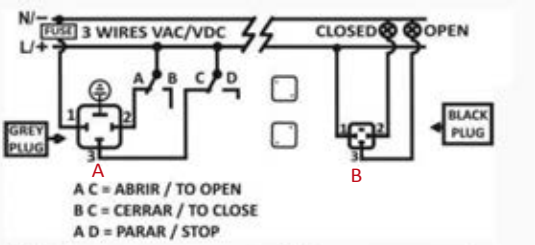

J4C 140/300

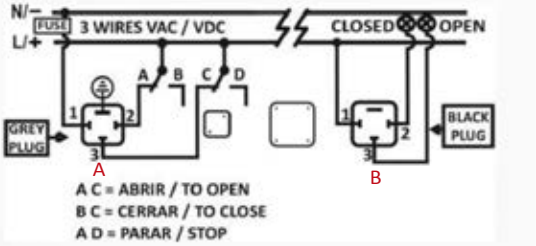

8 MODE ON - OFF

A = Power supply plug

A: VAC 3 WIRES (Grey plug)
- PIN 1 = Neutral + PIN 2 = Phase = Stop
- PIN 1 = Neutral + PIN 2+3 = Phase = Open
- PIN 1 = Neutral + PIN 3 = Phase = Close

A: VDC 3 WIRES (Grey plug)
- PIN 1 = (-) Negative + PIN 2 = (+) Positive = Stop
- PIN 1 = (-) Negative + PIN 2+3 = (+) Positive = Open
- PIN 1 = (-) Negative + PIN 3 = (+) Positive = Close

B = Volt free contact plug
- PIN 1 / PIN 2 = Closed
- PIN 1 / PIN 3 = Open

ACTUATOR OPERATIONAL STATUS

MODELS: 20, 35, 55, 85, 140 & 300

The **LED Light** provides visual communication between the actuator and the user.
The current operational **status** is shown by **different LED colors**.

ON-OFF ACTUATOR	ACTUATOR OPERATIONAL STATUS
Without power supply	
In open position	
In close position	
Opening	
Closing	
Torque limiter function on, moving from close to open	
Torque limiter function on, moving from open to close	
Actuator in MANUAL mode (Exceeded time)	
The actuator has stopped (no close/no open position)	
In middle position	

ACTUATOR WITH BSR	ACTUATOR OPERATIONAL STATUS
Without power supply	
In open position	
In close position	
Opening	
Closing	
Torque limiter function on, moving from close to open	
Torque limiter function on, moving from open to close	
Actuator in MANUAL mode (Exceeded time)	
The actuator has stopped (no close/no open position)	
In middle position	
Actuator without power, working with the BSR NO system. Max.3 min., (led off)	
Actuator without power, working with the BSR NC system. Max.3 min., (led off)	
Battery protection. Danger, the battery needs recharging. BSR blocked	

ACTUATOR WITH DPS	ACTUATOR OPERATIONAL STATUS
Without power supplied	
Motor stop	
Opening	
Closing	
Self adjusting configuration	
Torque limiter function on, moving from close to open	
Torque limiter function on, moving from open to close	
Instrum. Signal overpassed. Blocked actuator. Need a re-set.	
Actuator in MANUAL mode (exceeded time)	
No Instrum. Signal pick-up. 4-20mA and 1-10V only.	

03 Datasheet - J4C 20

GENERAL CHARACTERISTICS

Housing: Anticorrosive polyamide (lid & body)
Main external shaft: Anticorrosive polyamide
External screws: stainless steel
Gears: Steel and polyamide
Visual position indicator: Polyamide
Dome: Polycarbonate
Adjustable internal cams: Polyamide
Electric motor: 24VDC Brushless motor
Insulation: Class B
(IEC 60034) Service: S4

Model	S20	B20	H20
Voltage VDC/VAC 50/60Hz-0/+5%	24-240 VAC / 24-135 VDC	12 VDC/VAC ONLY	85- 240 VAC/VDC

Model	S20/B20/H20
Operation time unload	9 Sec./90^0
Maximum torque break	25 Nm / 221 lb/in
Maximum operational torque	20 Nm / 177 lb/in
Duty rating	75 %
Max. Working angle	0^0 to 270^0
Limit switch	4 SPST NO micro (2 motor stop and 2 confirmations)
Automatic heater	3,5 W
Big Plug	EN175301-803 FORM A
Small Plug	DIN43650/C
Protection IEC 60529 rating	IP67
Temperature	-20^{0}C +70^{0}C /-4^{0}F +158^{0}F
ISO 5211 Plate	Standard: F03/F04/F05 Optional: F07 *17mm
DIN 3337 Female output drive	Standard: *14 Optional: *9, *11mm
Weight	1,8 Kg

Options

J4C 20/85 KIT DPS digital positioner:	4-20mA, 0-20mA, 0-10V or 1-10V
J4C 20/85 KIT BSR emergency fail safe kit system by battery	NC- NO
Potentiometer	1K, 5K or 10K
3 position actuator	0^0-45^0-90^0 or 0^0-90^0-180^0

J4C 20 SIZES

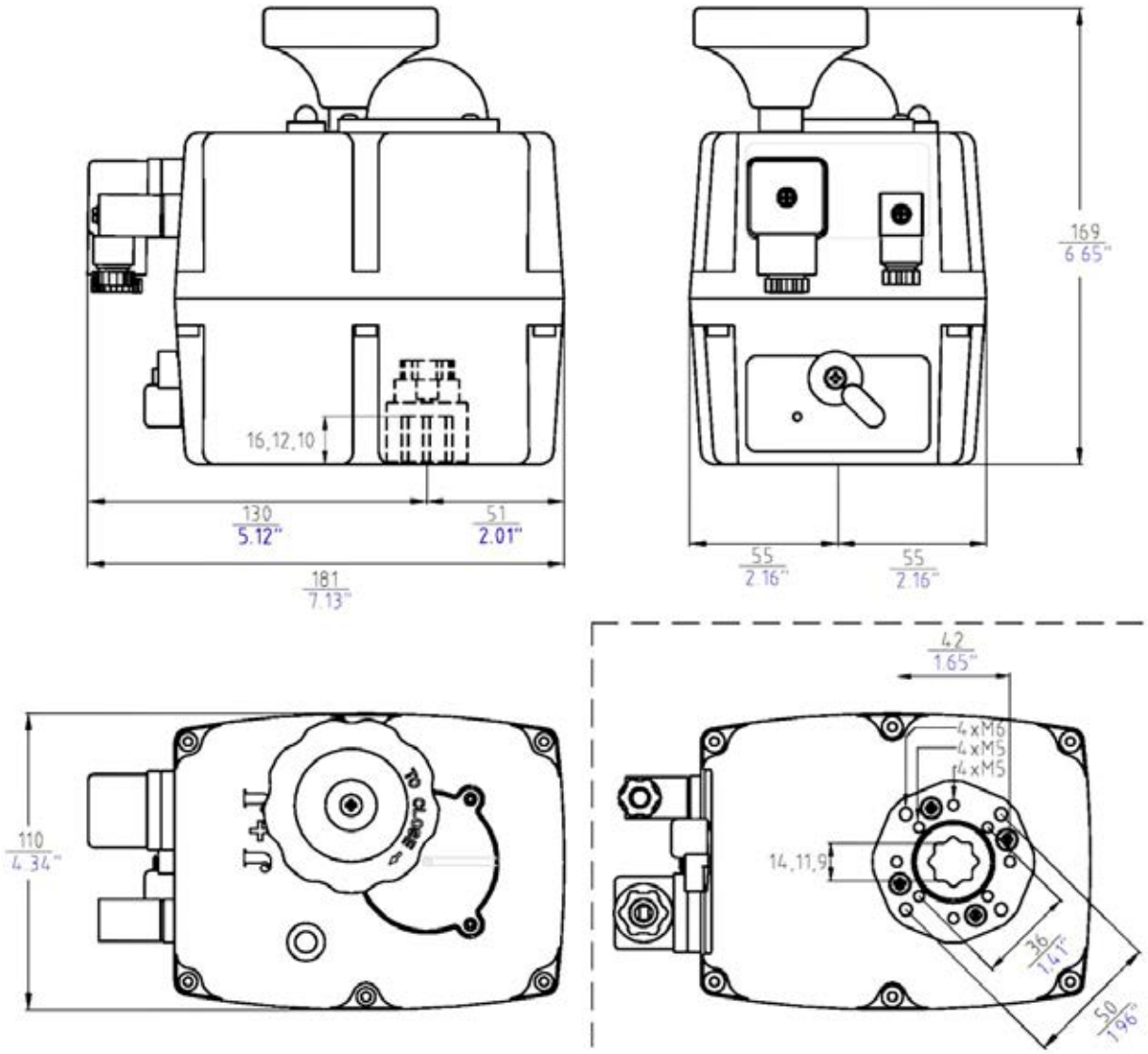
16,12,10
130
5.12"
51
2.01"
181
7.13"
169
6.65"
55
2.16"
55
2.16"
110
4.34"
42
1.65"
4xM6
4xM5
4xM5
14,11,9
36
1.41"
50
1.96"

Exploded View

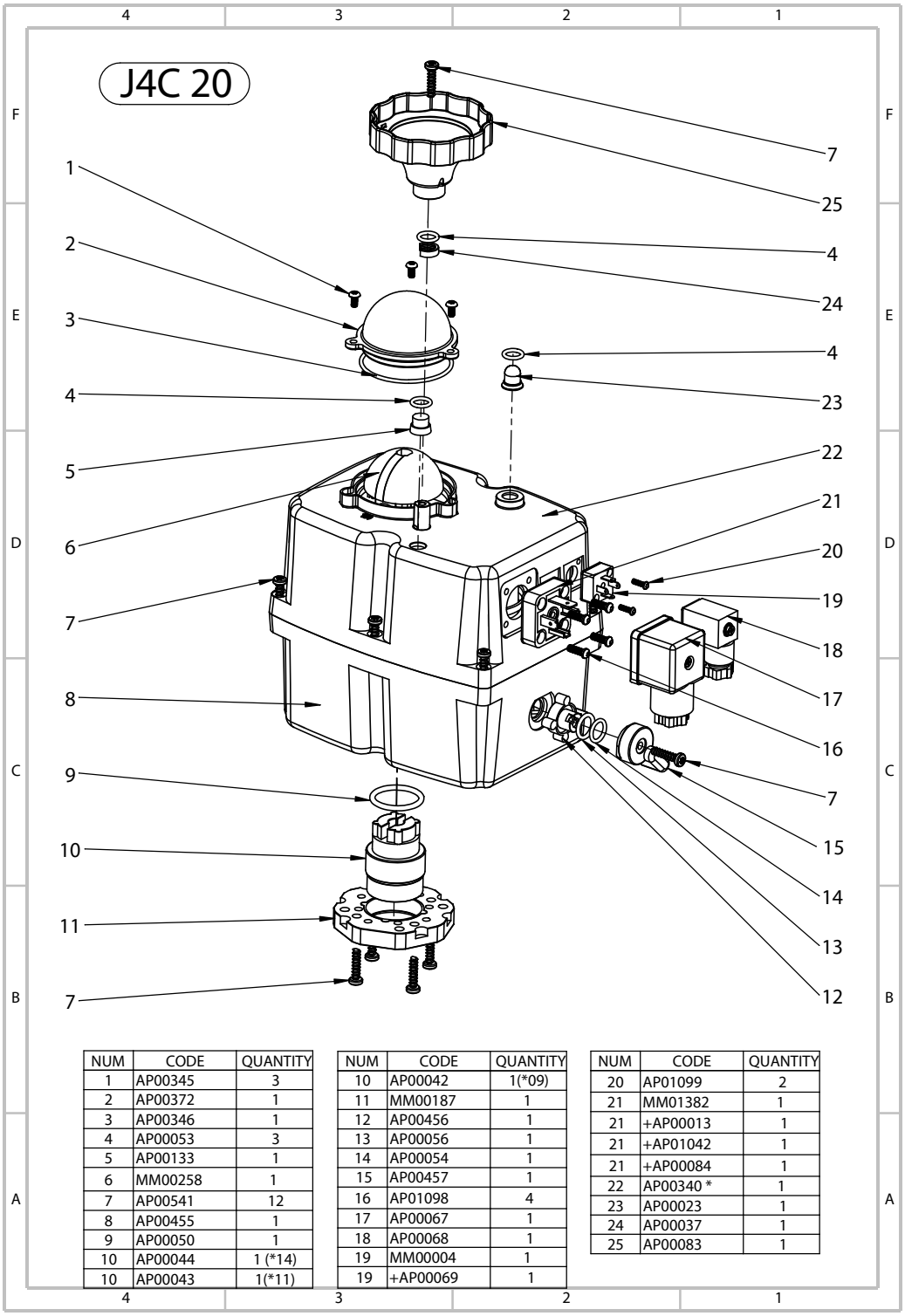

NUM	CODE	QUANTITY
1	AP00345	3
2	AP00372	1
3	AP00346	1
4	AP00053	3
5	AP00133	1
6	MM00258	1
7	AP00541	12
8	AP00455	1
9	AP00050	1
10	AP00044	1 (*14)
10	AP00043	1(*11)

NUM	CODE	QUANTITY
10	AP00042	1(*09)
11	MM00187	1
12	AP00456	1
13	AP00056	1
14	AP00054	1
15	AP00457	1
16	AP01098	4
17	AP00067	1
18	AP00068	1
19	MM00004	1
19	+AP00069	1

NUM	CODE	QUANTITY
20	AP01099	2
21	MM01382	1
21	+AP00013	1
21	+AP01042	1
21	+AP00084	1
22	AP00340 *	1
23	AP00023	1
24	AP00037	1
25	AP00083	1

Exploded View

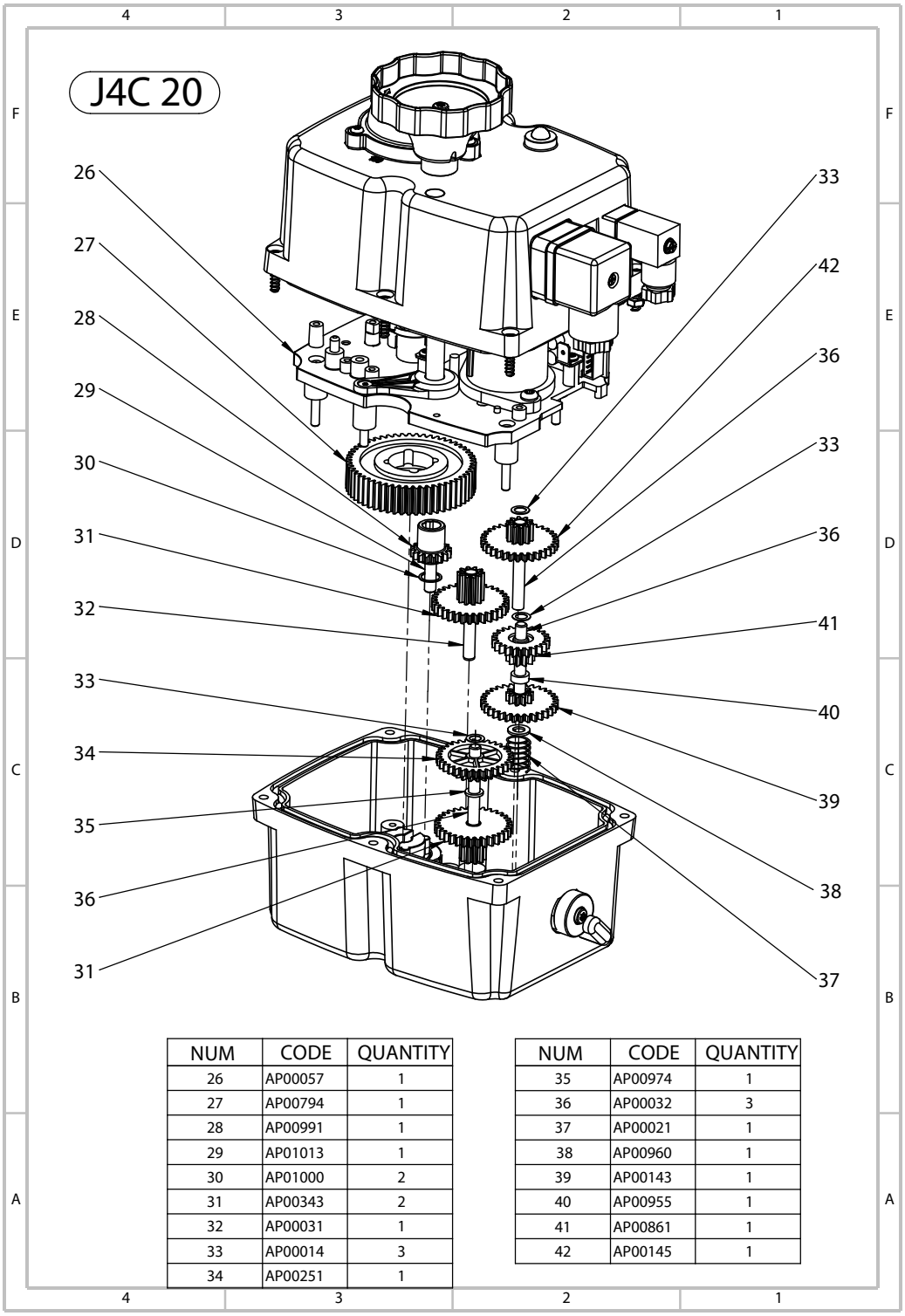

NUM	CODE	QUANTITY
26	AP00057	1
27	AP00794	1
28	AP00991	1
29	AP01013	1
30	AP01000	2
31	AP00343	2
32	AP00031	1
33	AP00014	3
34	AP00251	1

NUM	CODE	QUANTITY
35	AP00974	1
36	AP00032	3
37	AP00021	1
38	AP00960	1
39	AP00143	1
40	AP00955	1
41	AP00861	1
42	AP00145	1

Exploded View

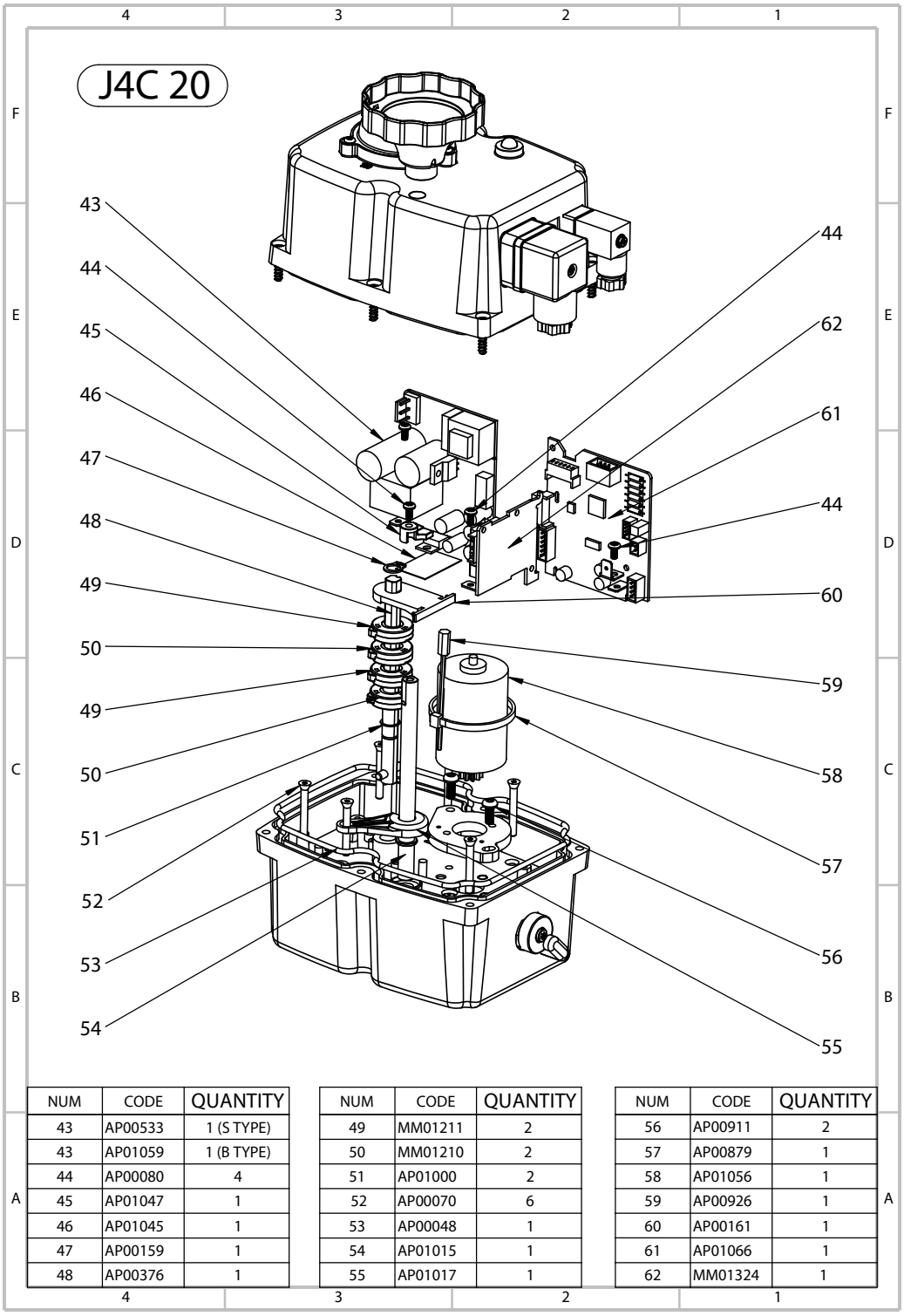

NUM	CODE	QUANTITY
43	AP00533	1 (S TYPE)
43	AP01059	1 (B TYPE)
44	AP00080	4
45	AP01047	1
46	AP01045	1
47	AP00159	1
48	AP00376	1

NUM	CODE	QUANTITY
49	MM01211	2
50	MM01210	2
51	AP01000	2
52	AP00070	6
53	AP00048	1
54	AP01015	1
55	AP01017	1

NUM	CODE	QUANTITY
56	AP00911	2
57	AP00879	1
58	AP01056	1
59	AP00926	1
60	AP00161	1
61	AP01066	1
62	MM01324	1

Datasheet - J4C 35

GENERAL CHARACTERISTICS

Housing: Anticorrosive polyamide (lid & body)
Main external shaft: stainless steel
External screws: stainless steel
Gears: Steel and polyamide
Visual position indicator: Polyamide
Dome: Polycarbonate
Adjustable internal cams: Polyamide
Electric motor: 24VDC Brushless motor
Insulation: Class B
(IEC 60034) Service: S4

Model	S35	B35	H35
Voltage VDC/VAC 50/60Hz-0/+5%	24-240 VAC / 24-135 VDC	12 VDC/VAC ONLY	85- 240 VAC/VDC

Model	S35/B35/H35
Operation time unload	9 Sec./90^0
Maximum torque break	38 Nm / 359,3 lb/in
Maximum operational torque	35 Nm / 309 lb/in
Duty rating	75 %
Max. Working angle	0^0 to 270^0
Limit switch	4 SPST NO micro (2 motor stop and 2 confirmations)
Automatic heater	3,5 W
Big Plug	EN175301-803 FORM A
Small Plug	DIN43650/C
Protection IEC 60529 rating	IP67
Temperature	-20^{0}C +70^{0}C /-4^{0}F +158^{0}F
ISO 5211 Plate	Standard: F03/F04/F05 Optional: F07 *17mm
DIN 3337 Female output drive	Standard: *14 Optional: *9, *11mm
Weight	1,8 Kg

Options

J4C 20/85 KIT DPS digital positioner:	4-20mA, 0-20mA, 0-10V or 1-10V
J4C 20/85 KIT BSR emergency fail safe kit system by battery	NC- NO
Potentiometer	1K, 5K or 10K
3 position actuator	0^0-45^0-90^0 or 0^0-90^0-180^0

J4C 35 SIZES

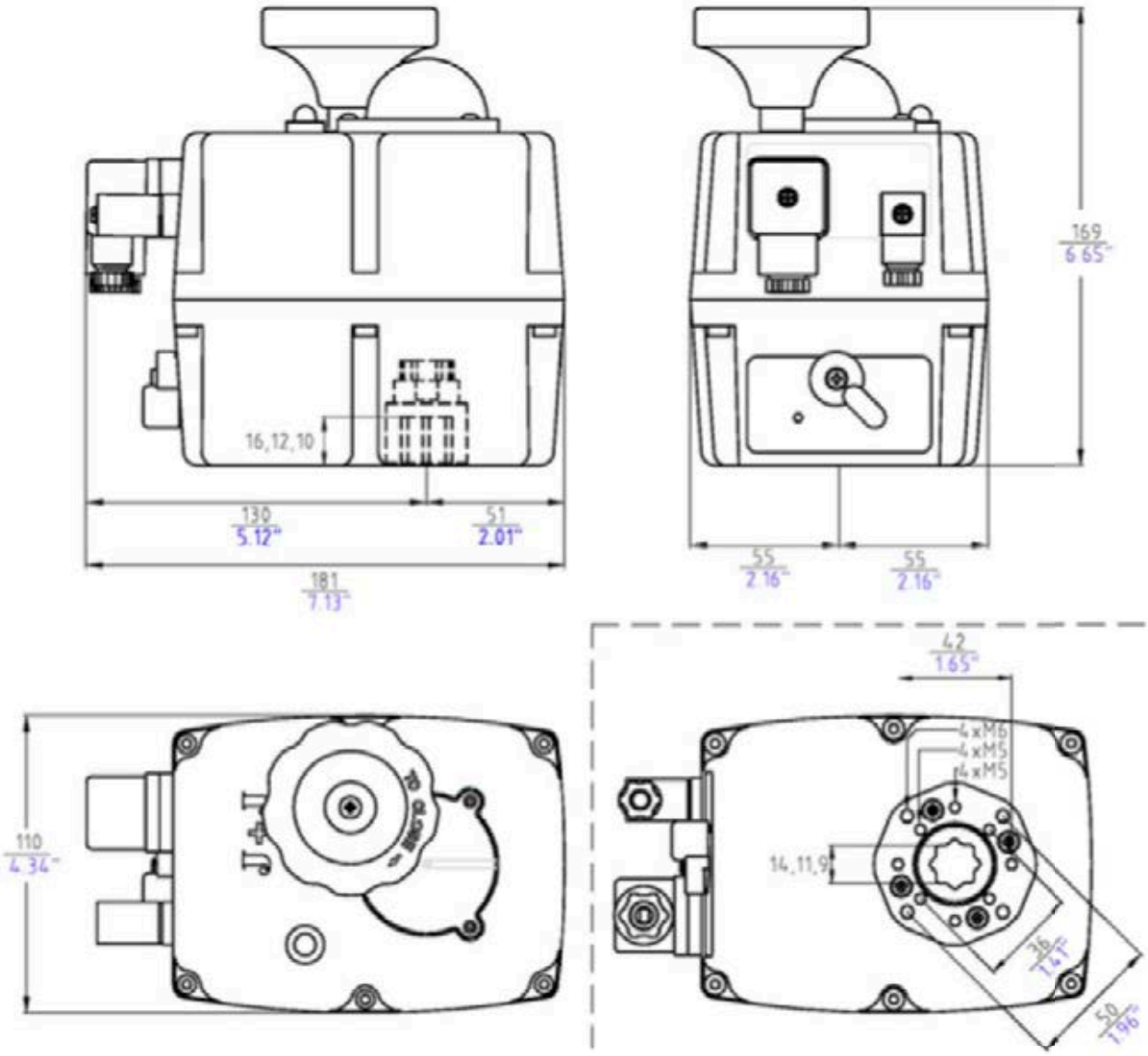
16,12,10
130
5.12"
51
2.01"
181
7.13"
169
6.65"
55
2.16"
55
2.16"
110
4.34"
42
1.65"
4xM6
4xM5
4xM5
14,11,9
36
1.41"
50
1.96"

Exploded View

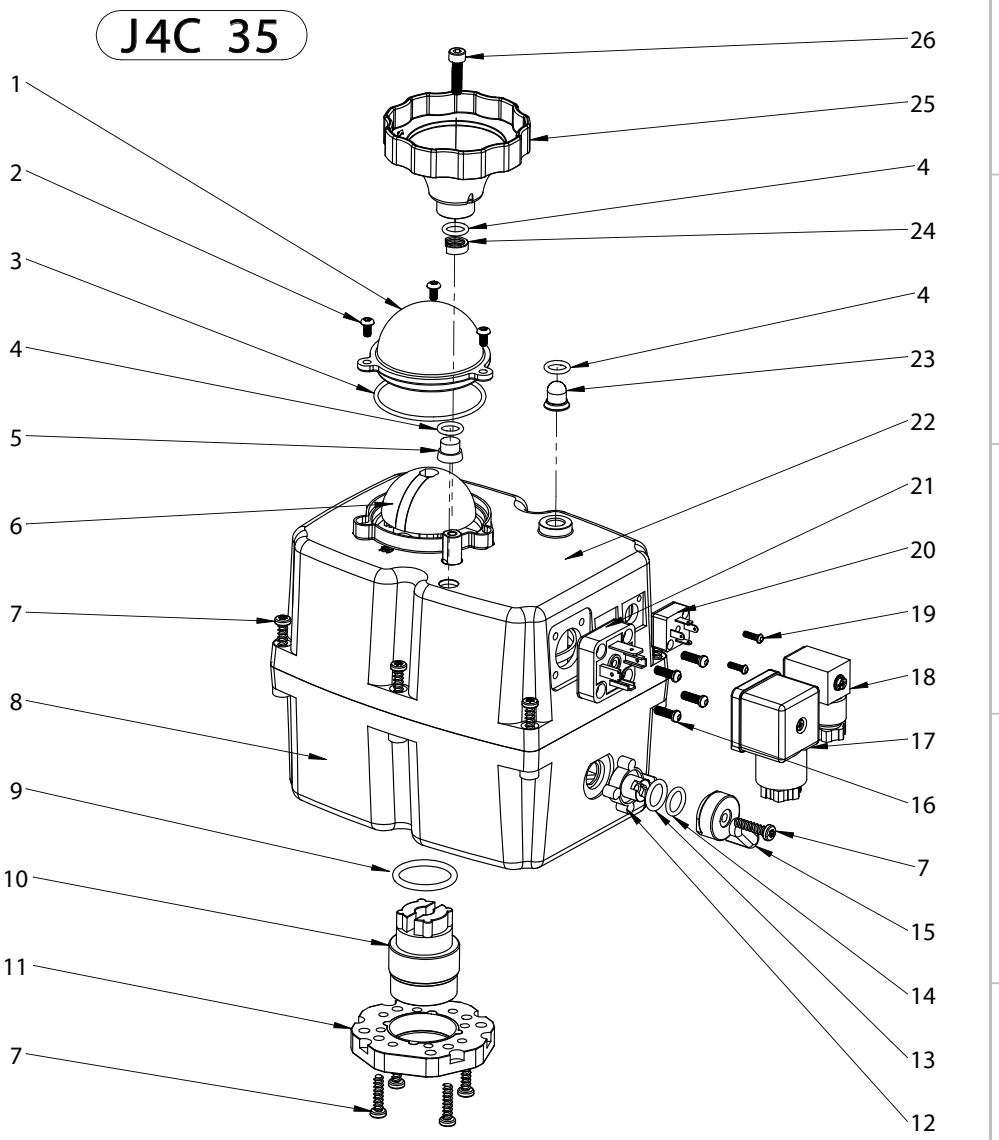

NUM	CODE	QUANTITY
1	AP00372	1
2	AP00345	3
3	AP00346	1
4	AP00053	3
5	AP00133	1
6	MM00258	1
7	AP00541	11
8	AP00455	1
9	AP00050	1
10	AP00044	1(*14)
10	AP00043	1(*11)

NUM	CODE	QUANTITY
10	AP00042	1(*09)
11	MM00187	1
12	AP00456	1
13	AP00056	1
14	AP00054	1
15	AP00457	1
16	AP01098	4
17	AP00067	1
18	AP00068	1
19	AP01099	2
20	MM00004	1

NUM	CODE	QUANTITY
20	+AP00069	1
21	MM01382	1
21	+AP00013	1
21	+AP01042	1
21	+AP00084	1
22	AP00340 *	1
23	AP00023	1
24	AP00037	1
25	AP00083	1
26	AP00162	1

Exploded View

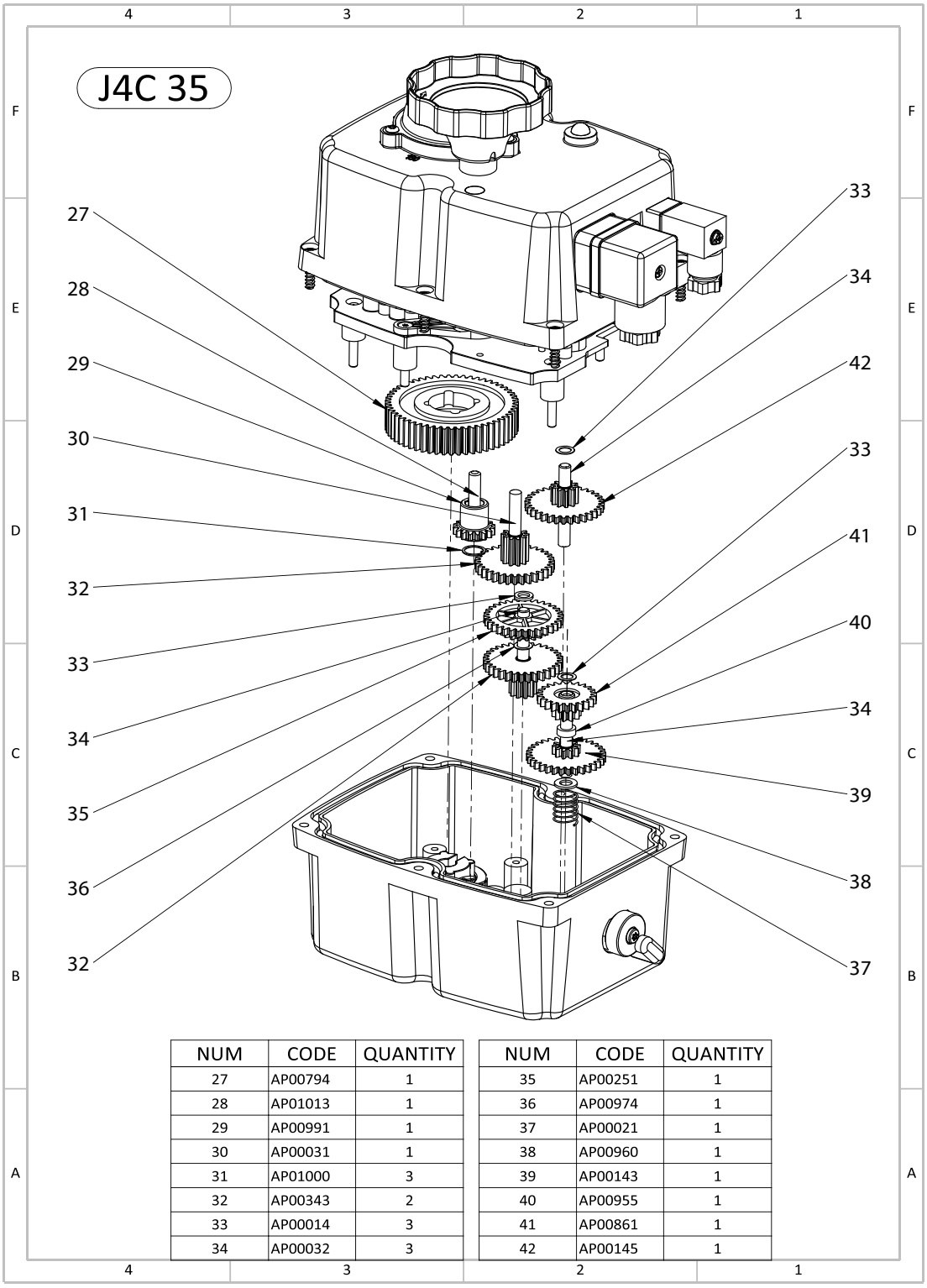

NUM	CODE	QUANTITY
27	AP00794	1
28	AP01013	1
29	AP00991	1
30	AP00031	1
31	AP01000	3
32	AP00343	2
33	AP00014	3
34	AP00032	3

NUM	CODE	QUANTITY
35	AP00251	1
36	AP00974	1
37	AP00021	1
38	AP00960	1
39	AP00143	1
40	AP00955	1
41	AP00861	1
42	AP00145	1

Exploded View

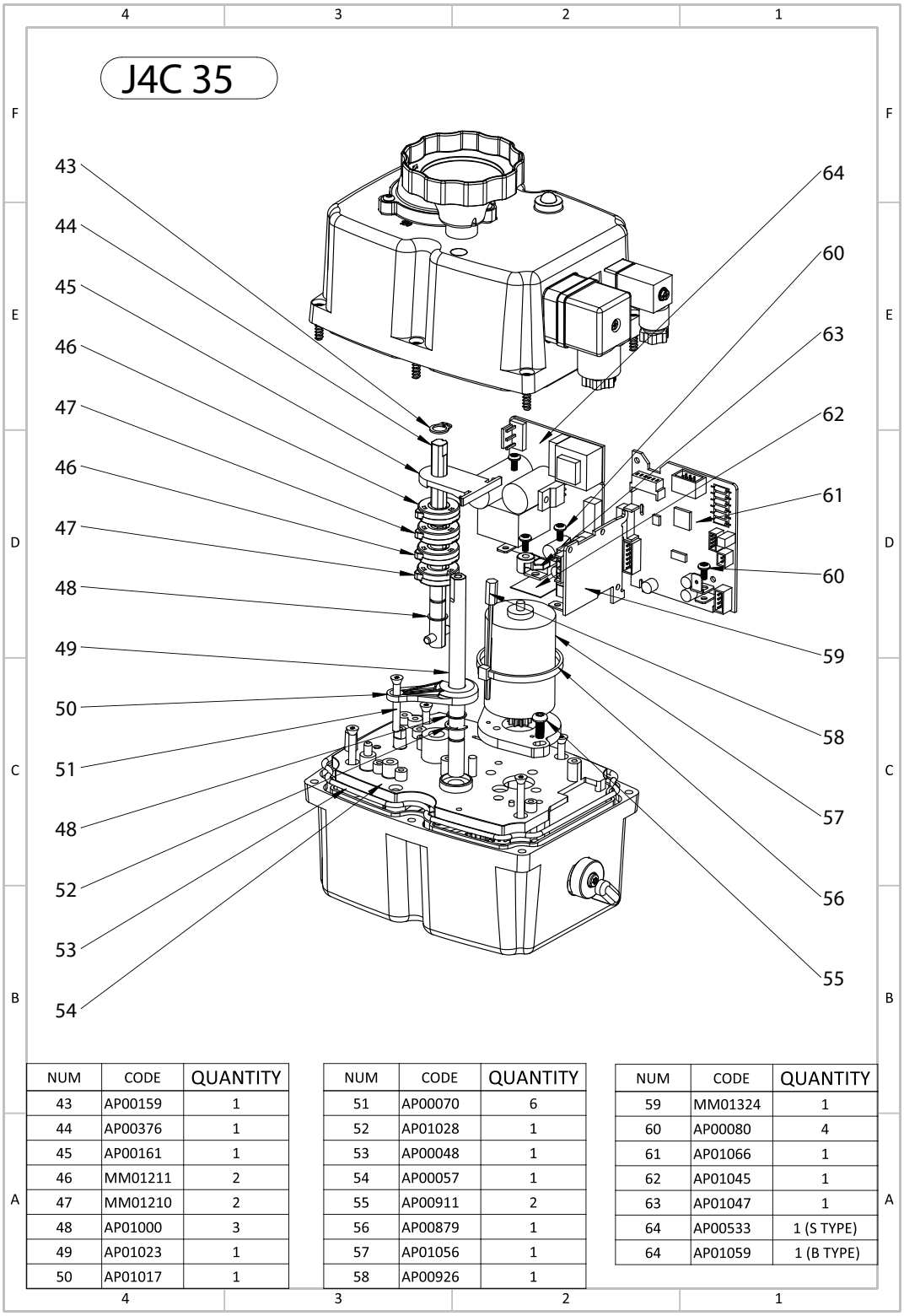

NUM	CODE	QUANTITY
43	AP00159	1
44	AP00376	1
45	AP00161	1
46	MM01211	2
47	MM01210	2
48	AP01000	3
49	AP01023	1
50	AP01017	1

NUM	CODE	QUANTITY
51	AP00070	6
52	AP01028	1
53	AP00048	1
54	AP00057	1
55	AP00911	2
56	AP00879	1
57	AP01056	1
58	AP00926	1

NUM	CODE	QUANTITY
59	MM01324	1
60	AP00080	4
61	AP01066	1
62	AP01045	1
63	AP01047	1
64	AP00533	1 (S TYPE)
64	AP01059	1 (B TYPE)

Datasheet - J4C 55

GENERAL CHARACTERISTICS

Housing: Anticorrosive polyamide (lid & body)
Main external shaft: stainless steel
External screws: stainless steel
Gears: Steel and polyamide
Visual position indicator: Polyamide
Dome: Polycarbonate
Adjustable internal cams: Polyamide
Electric motor: 24VDC Brushless motor
Insulation: Class B
(IEC 60034) Service: S4

Model	S55	B55	H55
Voltage VDC/VAC 50/60Hz-0/+5%	24-240 VAC / 24-135 VDC	12 VDC/VAC ONLY	85- 240 VAC/VDC

Model	S55/B55/H55
Operation time unload	13 Sec./90^0
Maximum torque break	60 Nm / 530 lb/in
Maximum operational torque	55 Nm / 486 lb/in
Duty rating	75 %
Max. Working angle	0^0 to 270^0
Limit switch	4 SPST NO micro (2 motor stop and 2 confirmations)
Automatic heater	3,5 W
Big Plug	EN175301-803 FORM A
Small Plug	DIN43650/C
Protection IEC 60529 rating	IP67
Temperature	-20^{0}C +70^{0}C /-4^{0}F +158^{0}F
ISO 5211 Plate	Standard: F05/F07
DIN 3337 Female output drive	Standard: *17 Optional: *11, *14mm
Weight	2,3 Kg

Options

J4C 20/85 KIT DPS digital positioner:	4-20mA, 0-20mA, 0-10V or 1-10V
J4C 20/85 KIT BSR emergency fail safe kit system by battery	NC- NO
Potentiometer	1K, 5K or 10K
3 position actuator	0^0-45^0-90^0 or 0^0-90^0-180^0

J4C 55 SIZES

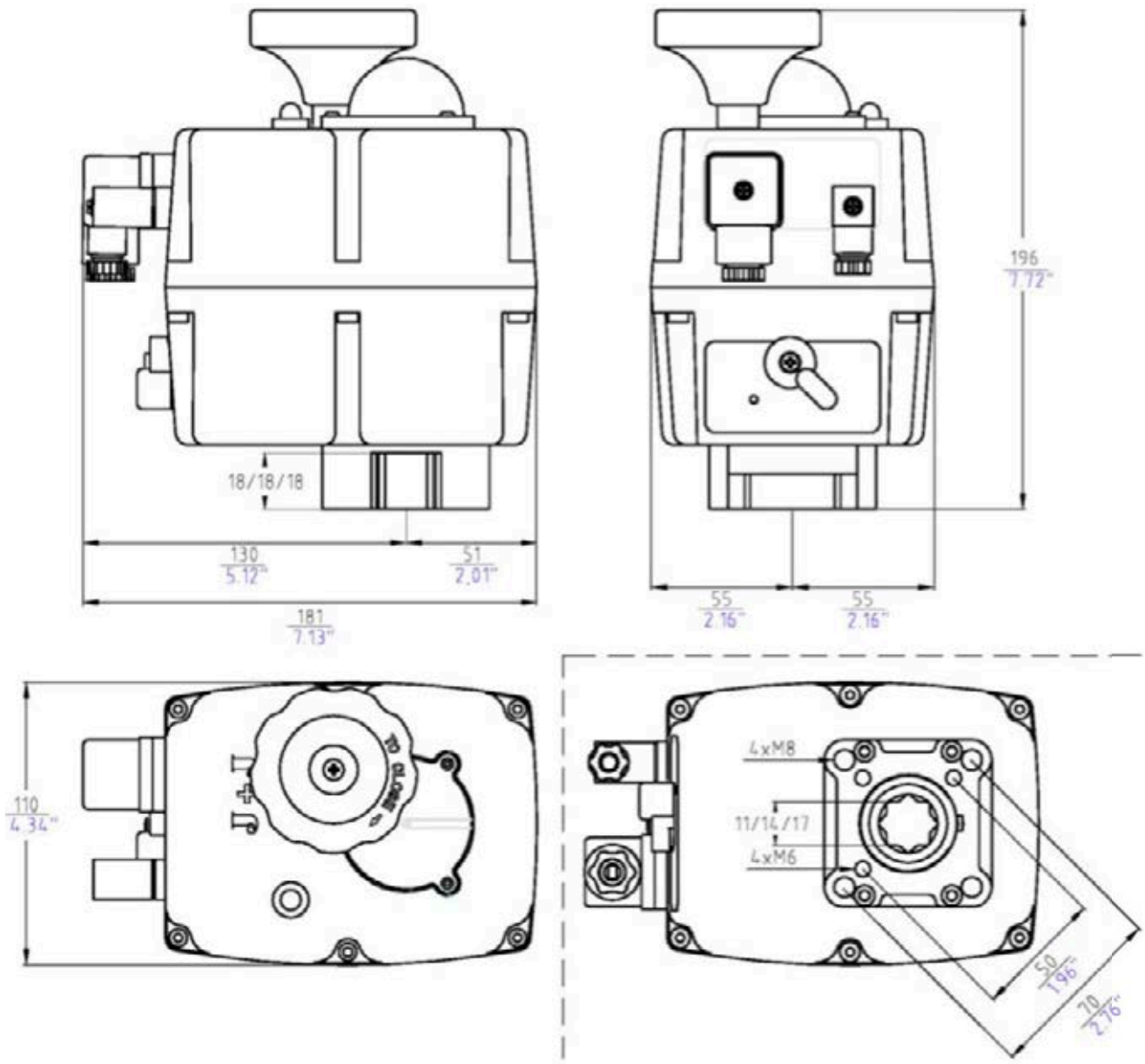
18/18/18
130
5.12"
51
2.01"
181
7.13"
196
7.72"
55
2.16"
55
2.16"
110
4.34"
4xM8
11/14/17
4xM6
50
1.96"
70
2.76"

Exploded View

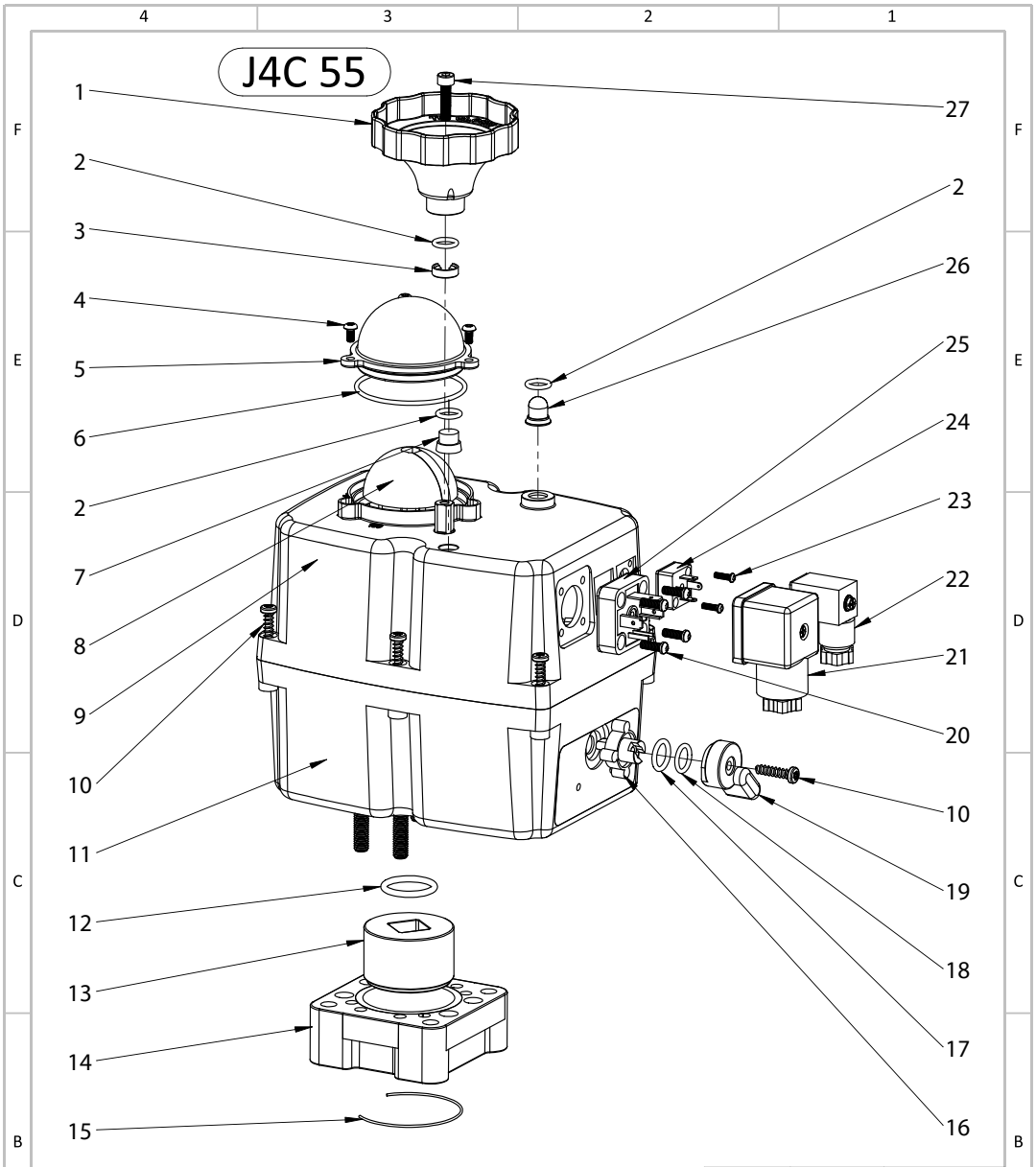

NUM	CODE	QUANTITY
1	AP00083	1
2	AP00053	7
3	AP00037	1
4	AP00345	3
5	AP00372	1
6	AP00346	1
7	AP00133	1
8	MM00258	1
9	AP00340 *	1
10	AP00541	7
11	AP00036	1

NUM	CODE	QUANTITY
12	AP00049	1
13	AP00046	1(*17)
13	AP00150	1(*11)
13	AP00045	1(*14)
14	MM00140	1
15	AP00016	1
16	AP00110	1
17	AP00056	1
18	AP00054	1
19	AP00457	1
20	AP01098	4

NUM	CODE	QUANTITY
21	AP00067	1
22	AP00068	1
23	AP01099	2
24	MM00004	1
24	+AP00069	1
25	MM01382	1
25	+AP00013	1
25	+AP01042	1
25	+AP00084	1
26	AP00023	1
27	AP00162	1

Exploded View

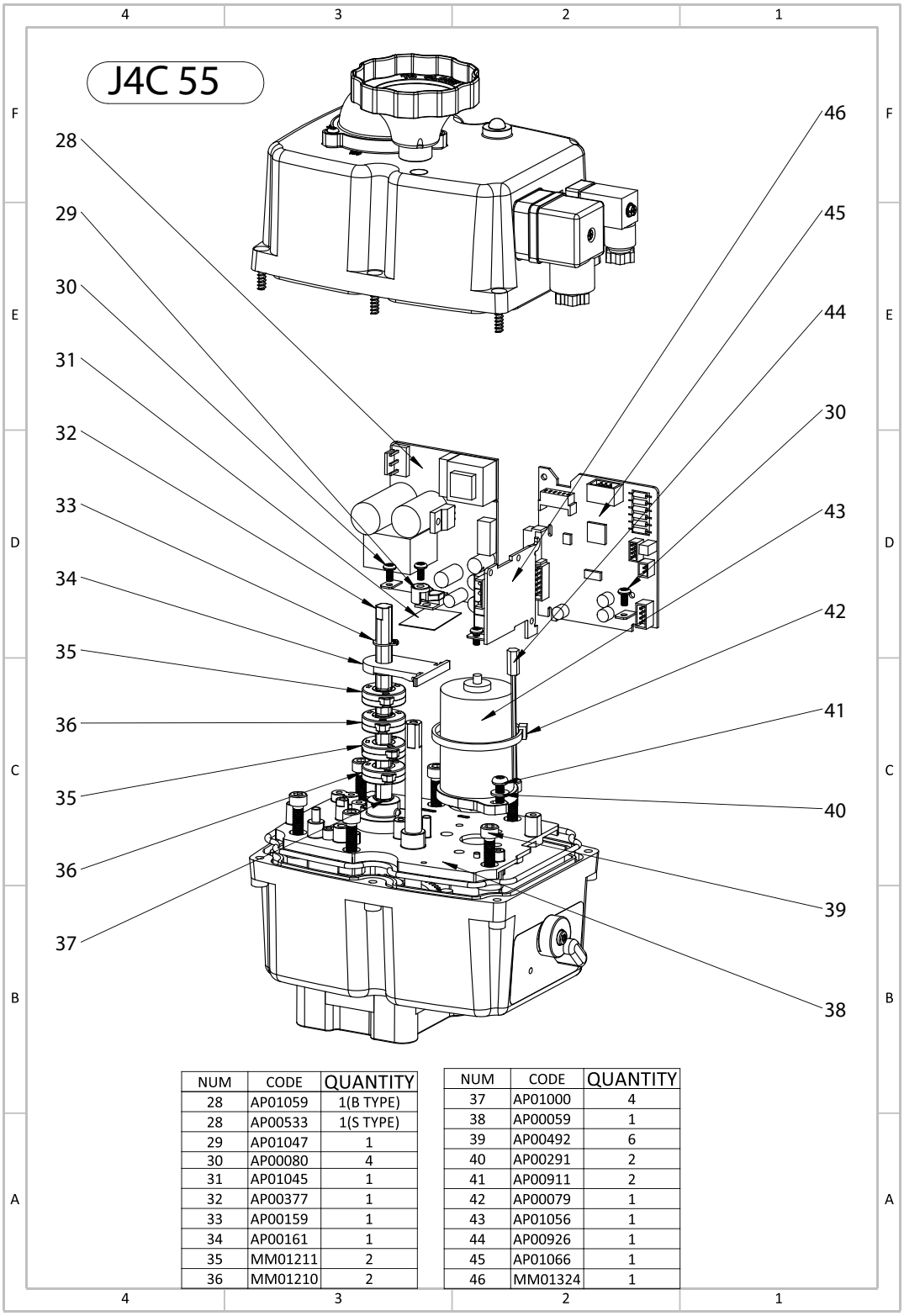

NUM	CODE	QUANTITY
28	AP01059	1(B TYPE)
28	AP00533	1(S TYPE)
29	AP01047	1
30	AP00080	4
31	AP01045	1
32	AP00377	1
33	AP00159	1
34	AP00161	1
35	MM01211	2
36	MM01210	2

NUM	CODE	QUANTITY
37	AP01000	4
38	AP00059	1
39	AP00492	6
40	AP00291	2
41	AP00911	2
42	AP00079	1
43	AP01056	1
44	AP00926	1
45	AP01066	1
46	MM01324	1

Exploded View

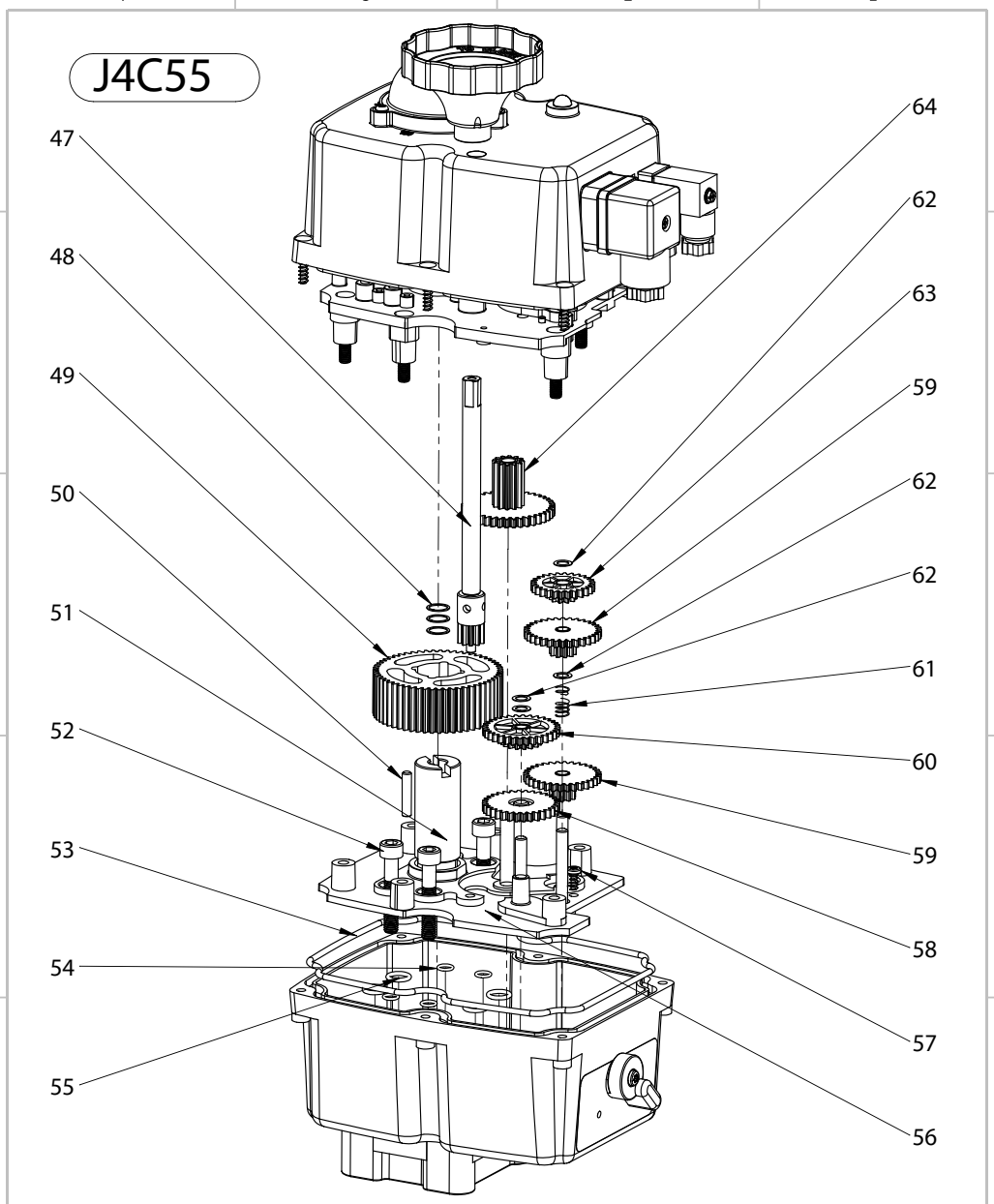

NUM	CODE	QUANTITY
47	MM00099	1
48	AP01000	4
49	AP00212	1
50	AP00281	1
51	AP00378	1
52	AP00077	4
53	AP00048	1
54	AP00052	4
55	AP00053	7

NUM	CODE	QUANTITY
56	AP00064	1
57	AP00539	1
58	AP00655	1
59	AP00145	2
60	AP00249	1
61	AP00866	1
62	AP00014	4
63	AP00745	1
64	AP00881	1

Datasheet - J4C 85

GENERAL CHARACTERISTICS

Housing: Anticorrosive polyamide (lid & body)
Main external shaft: stainless steel
External screws: stainless steel
Gears: Steel and polyamide
Visual position indicator: Polyamide
Dome: Polycarbonate
Adjustable internal cams: Polyamide
Electric motor: 24VDC Brushless motor
Insulation: Class B
(IEC 60034) Service: S4

Model	S85	B85	H85
Voltage VDC/VAC 50/60Hz-0/+5%	24-240 VAC / 24-135 VDC	12 VDC/VAC ONLY	85- 240 VAC/VDC

Model	S85/B85/H85
Operation time unload	29 Sec./90^0
Maximum torque break	90 Nm / 796,3 lb/in
Maximum operational torque	85 Nm / 752 lb/in
Duty rating	75 %
Max. Working angle	0^0 to 270^0
Limit switch	4 SPST NO micro (2 motor stop and 2 confirmations)
Automatic heater	3,5 W
Big Plug	EN175301-803 FORM A
Small Plug	DIN43650/C
Protection IEC 60529 rating	IP67
Temperature	-20^{0}C +70^{0}C /-4^{0}F +158^{0}F
ISO 5211 Plate	Standard: F05/F07
DIN 3337 Female output drive	Standard: *17 Optional: *14mm
Weight	2,8 Kg

Options

J4C 20/85 KIT DPS digital positioner:	4-20mA, 0-20mA, 0-10V or 1-10V
J4C 20/85 KIT BSR emergency fail safe kit system by battery	NC- NO
Potentiometer	1K, 5K or 10K
3 position actuator	0^0-45^0-90^0 or 0^0-90^0-180^0

J4C 85 SIZES

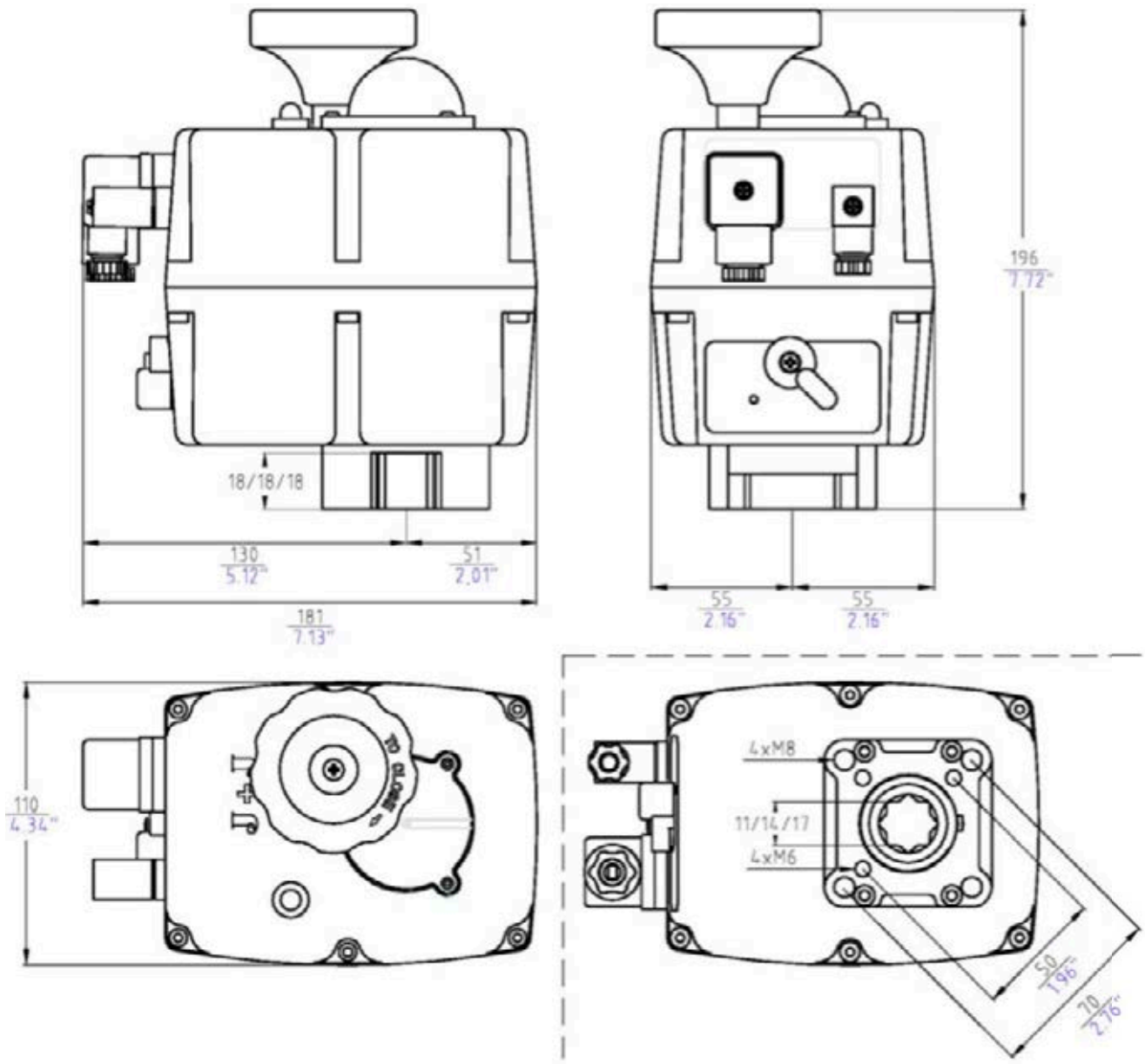
18/18/18
130
5.12"
51
2.01"
181
7.13"
196
7.72"
55
2.16"
55
2.16"
110
4.34"
4xM8
11/14/17
4xM6
50
1.96"
70
2.76"

Exploded View

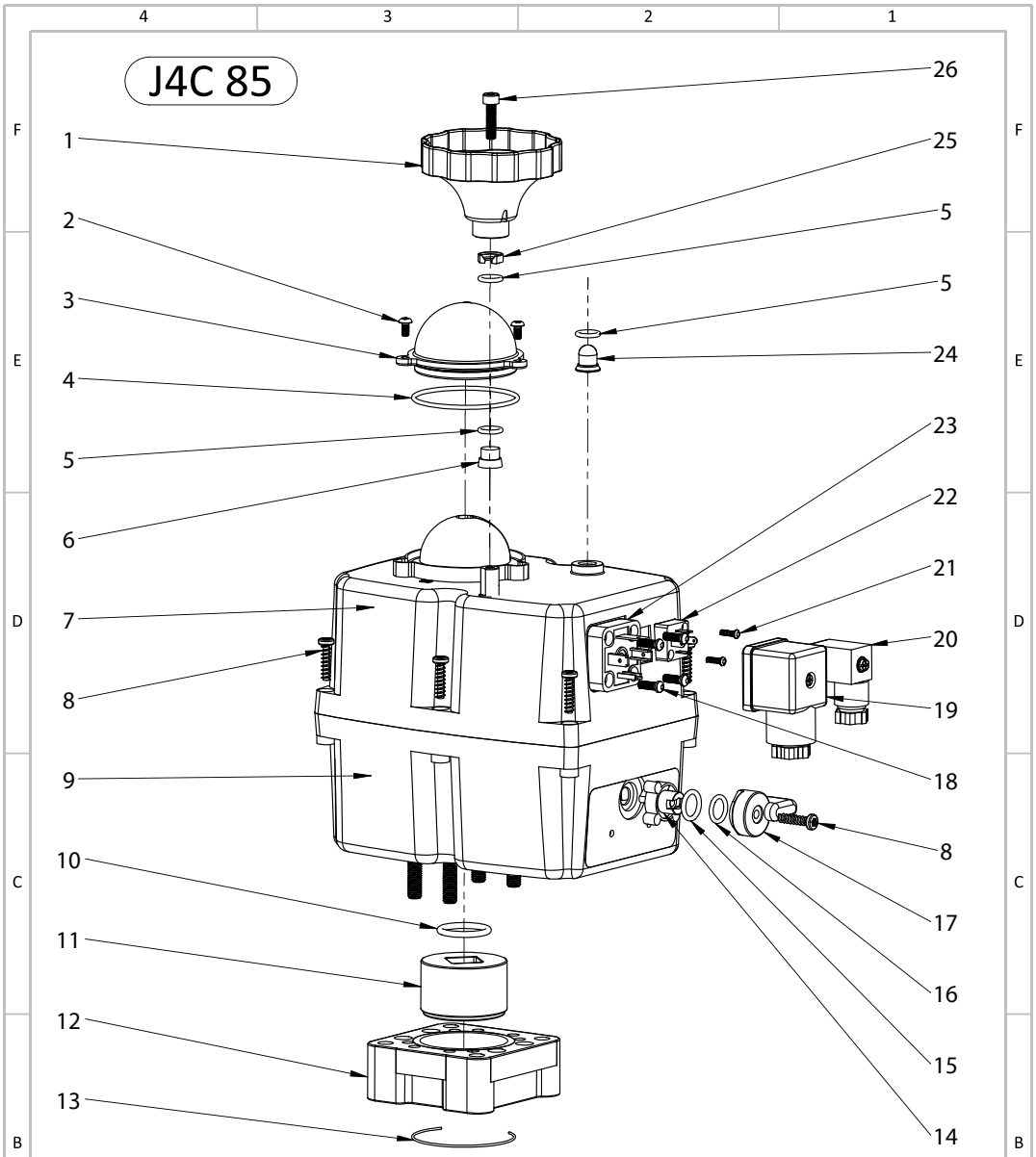

NÚMERO	CÓDIGO	CANTIDAD
1	AP01103	1
2	AP00345	3
3	AP00372	1
4	AP00346	1
5	AP00053	7
6	AP00133	1
7	AP00340 *	1
8	AP00541	7
9	AP00036	1
10	AP00049	1
11	AP00046	1(*17)

NÚMERO	CÓDIGO	CANTIDAD
11	AP00045	1(*14)
11	AP00150	1(*11)
12	MM00140	1
13	AP00016	1
14	AP00110	1
15	AP00056	1
16	AP00054	1
17	AP00457	1
18	AP01098	4
19	AP00067	1
20	AP00068	1

NÚMERO	CÓDIGO	CANTIDAD
21	AP01099	2
22	MM00004	1
22	+AP00069	1
23	MM01382	1
23	+AP00084	1
23	+AP01042	1
23	+AP00013	1
24	AP00023	1
25	AP00037	1
26	AP00162	1

Exploded View

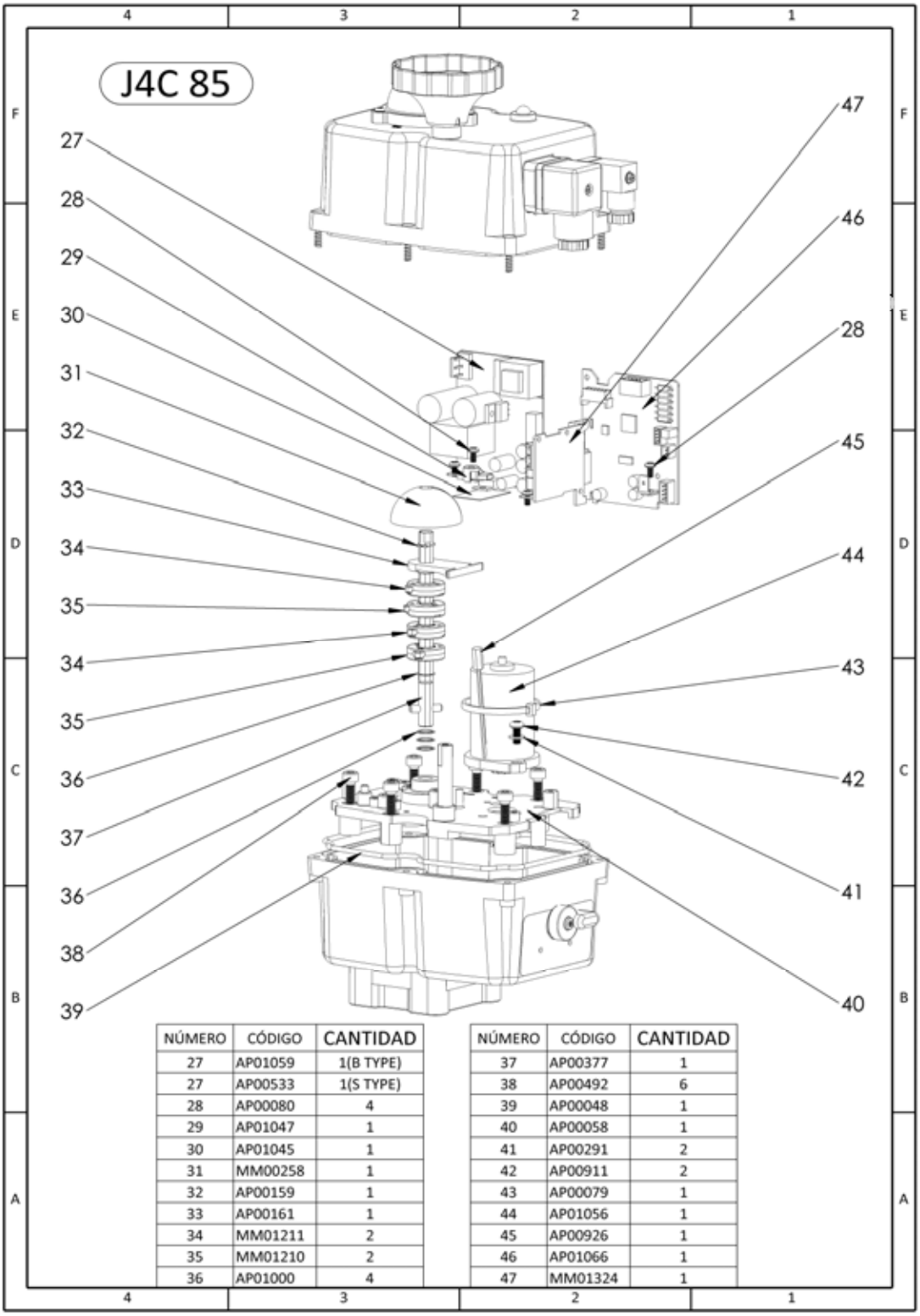

NÚMERO	CÓDIGO	CANTIDAD
27	AP01059	1(B TYPE)
27	AP00533	1(S TYPE)
28	AP00080	4
29	AP01047	1
30	AP01045	1
31	MM00258	1
32	AP00159	1
33	AP00161	1
34	MM01211	2
35	MM01210	2
36	AP01000	4

NÚMERO	CÓDIGO	CANTIDAD
37	AP00377	1
38	AP00492	6
39	AP00048	1
40	AP00058	1
41	AP00291	2
42	AP00911	2
43	AP00079	1
44	AP01056	1
45	AP00926	1
46	AP01066	1
47	MM01324	1

Exploded View

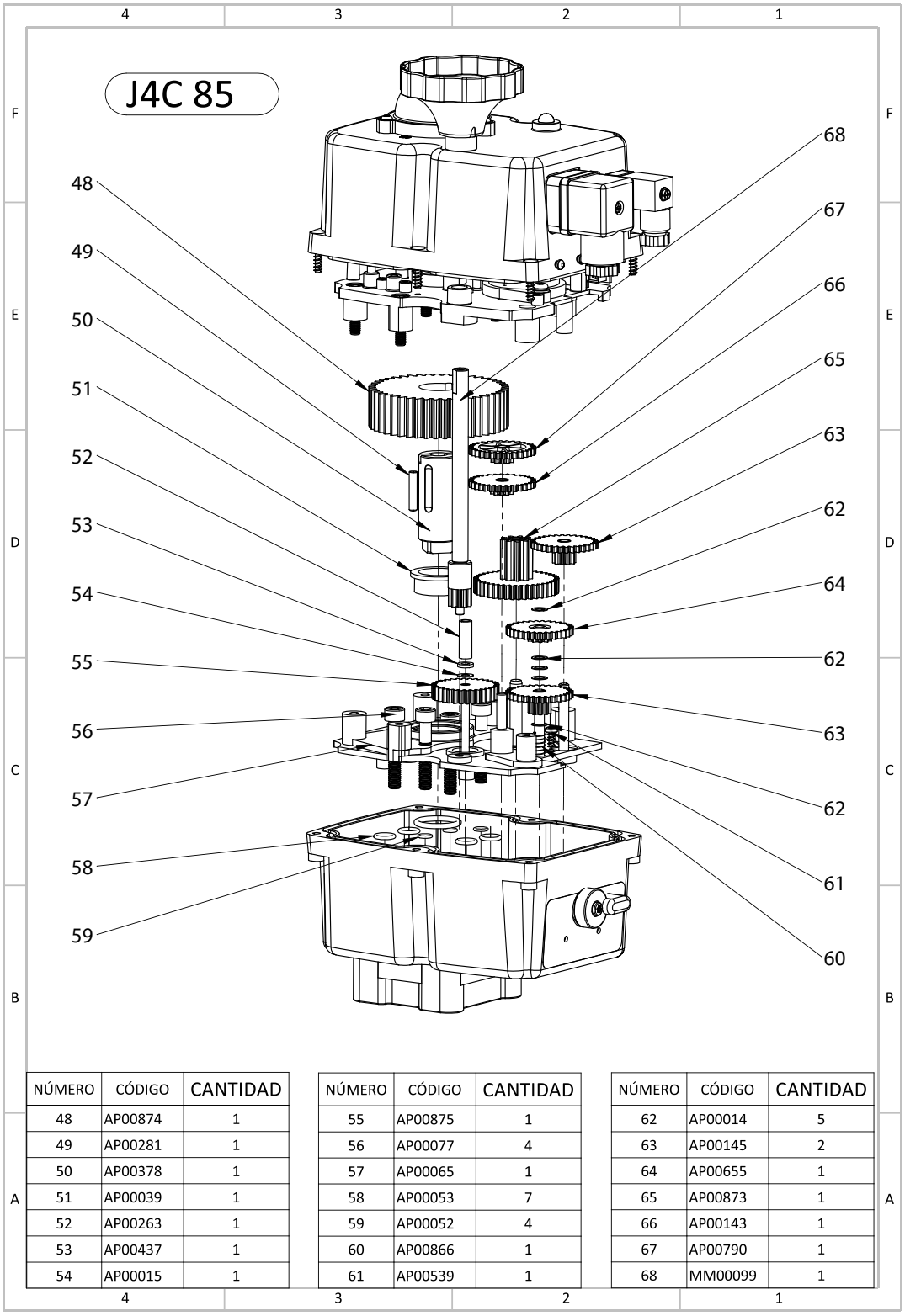

NÚMERO	CÓDIGO	CANTIDAD
48	AP00874	1
49	AP00281	1
50	AP00378	1
51	AP00039	1
52	AP00263	1
53	AP00437	1
54	AP00015	1

NÚMERO	CÓDIGO	CANTIDAD
55	AP00875	1
56	AP00077	4
57	AP00065	1
58	AP00053	7
59	AP00052	4
60	AP00866	1
61	AP00539	1

NÚMERO	CÓDIGO	CANTIDAD
62	AP00014	5
63	AP00145	2
64	AP00655	1
65	AP00873	1
66	AP00143	1
67	AP00790	1
68	MM00099	1

Datasheet - J4C 140

GENERAL CHARACTERISTICS

Housing: Anticorrosive polyamide (lid & body)
Main external shaft: stainless steel
External screws: stainless steel
Gears: Steel and polyamide
Visual position indicator: Polyamide
Dome: Polycarbonate
Adjustable internal cams: Polyamide
Electric motor: 24VDC Brushless motor
Insulation: Class B
(IEC 60034) Service: S4

Model	S140	B140	H140
Voltage VDC/VAC 50/60Hz-0/+5%	24-240 VAC / 24-135 VDC	12 VDC/VAC ONLY	85- 240 VAC/VDC

Model	S140/B140/H140
Operation time unload	34 Sec./90^0
Maximum torque break	170 Nm / 1504,5 lb/in
Maximum operational torque	140 Nm / 1239 lb/in
Duty rating	75 %
Max. Working angle	0^0 to 270^0
Limit switch	4 SPST NO micro (2 motor stop and 2 confirmations)
Automatic heater	3,5 W
Big Plug	EN175301-803 FORM A
Small Plug	DIN43650/C
Protection IEC 60529 rating	IP67
Temperature	-20^{0}C +70^{0}C /-4^{0}F +158^{0}F
ISO 5211 Plate	Standard: F07/F10 Optional: F12
DIN 3337 Female output drive	Standard: *22 Optional: *17mm
Weight	4,7 Kg

Options

J4C 20/85 KIT DPS digital positioner:	4-20mA, 0-20mA, 0-10V or 1-10V
J4C 20/85 KIT BSR emergency fail safe kit system by battery	NC- NO
Potentiometer	1K, 5K or 10K
3 position actuator	0^0-45^0-90^0 or 0^0-90^0-180^0

J4C 140 SIZES

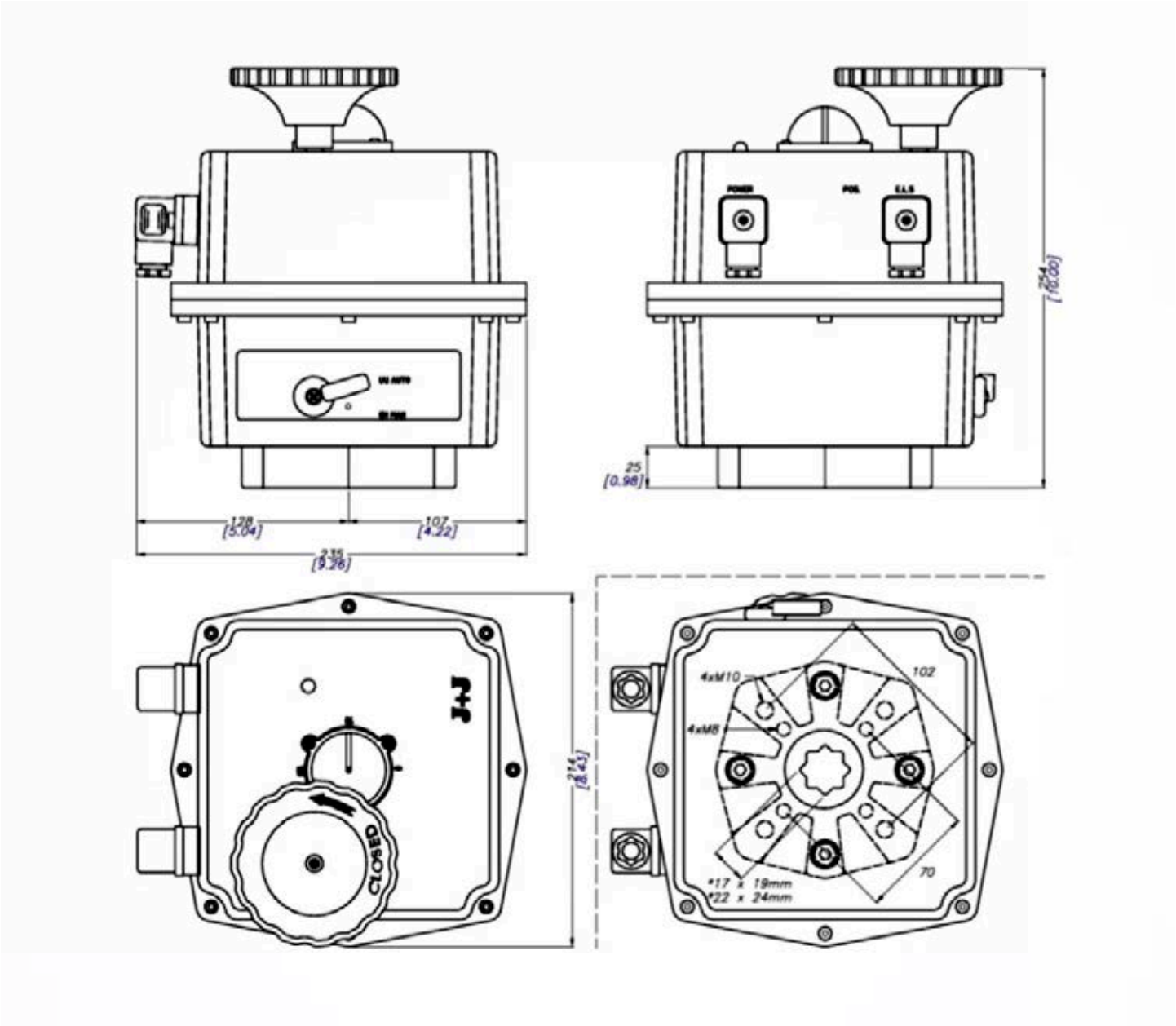

Exploded View

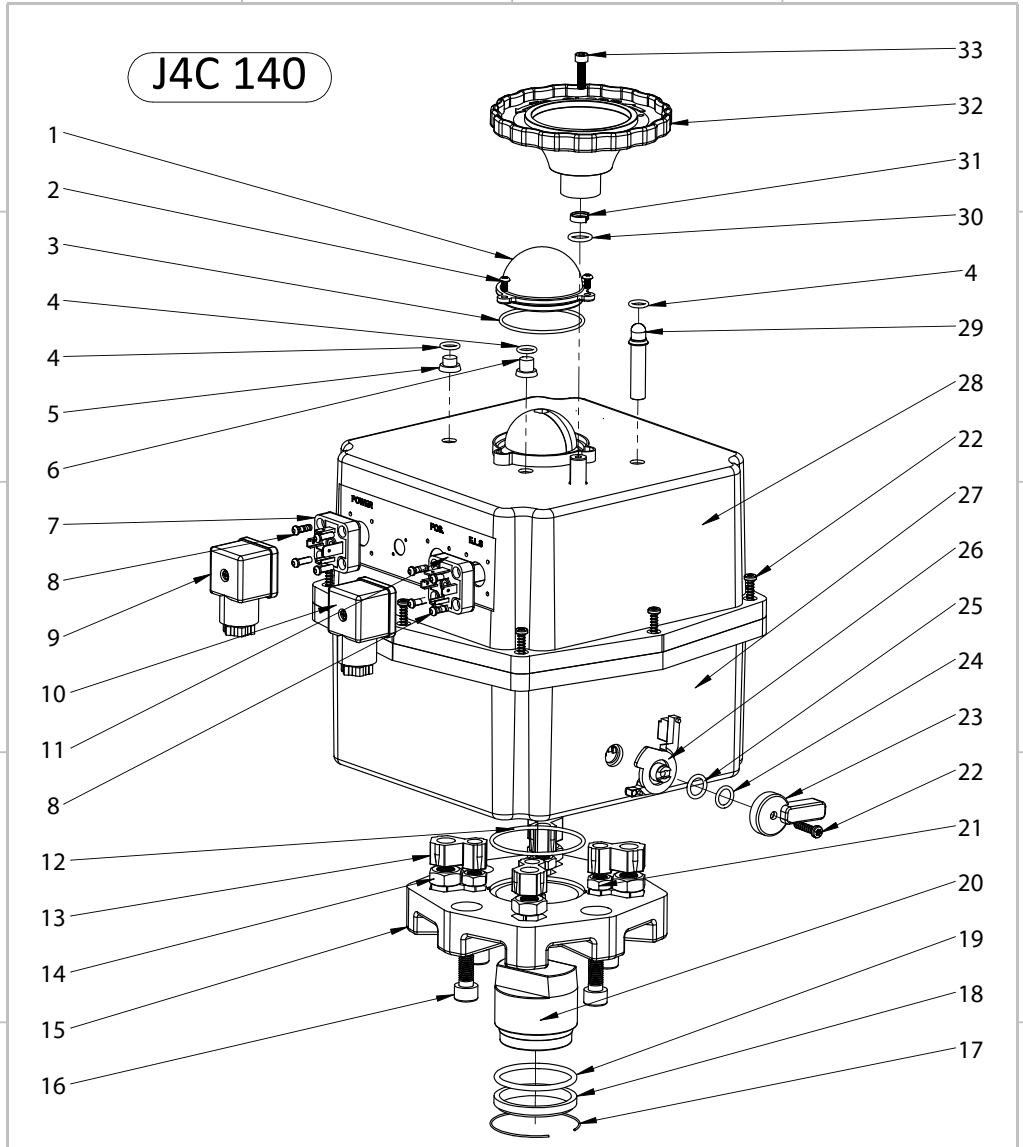

NÚMERO	CÓDIGO	CANTIDAD
1	AP00372	1
2	AP00345	3
3	AP00346	1
4	AP00053	3
5	AP01166	1
6	AP01165	1
7	MM00801	1
7	+AP01042	1
7	+AP00013	1
7	+AP00084	1
8	AP01098	8
9	AP00067	1
10	AP00066	1

NÚMERO	CÓDIGO	CANTIDAD
11	MM00321	1
11	+AP00069	1
12	AP00414	1
13	AP00966	4
14	AP00968	4
15	AP00962	1
16	AP00973	4
17	AP00017	1
18	AP00413	1
19	AP00412	1
20	AP00127	1(*22)
20	AP00280	1(*17)
20	AP00217	1(*27)

NÚMERO	CÓDIGO	CANTIDAD
21	AP00967	4
22	AP00541	9
23	AP01128	1
24	AP00054	1
25	AP00056	1
26	AP00474	1
27	AP01095	1
28	AP01088*	1
29	AP00604	1
30	AP00318	1
31	AP00321	1
32	AP00292	1
33	AP00162	1

Exploded View

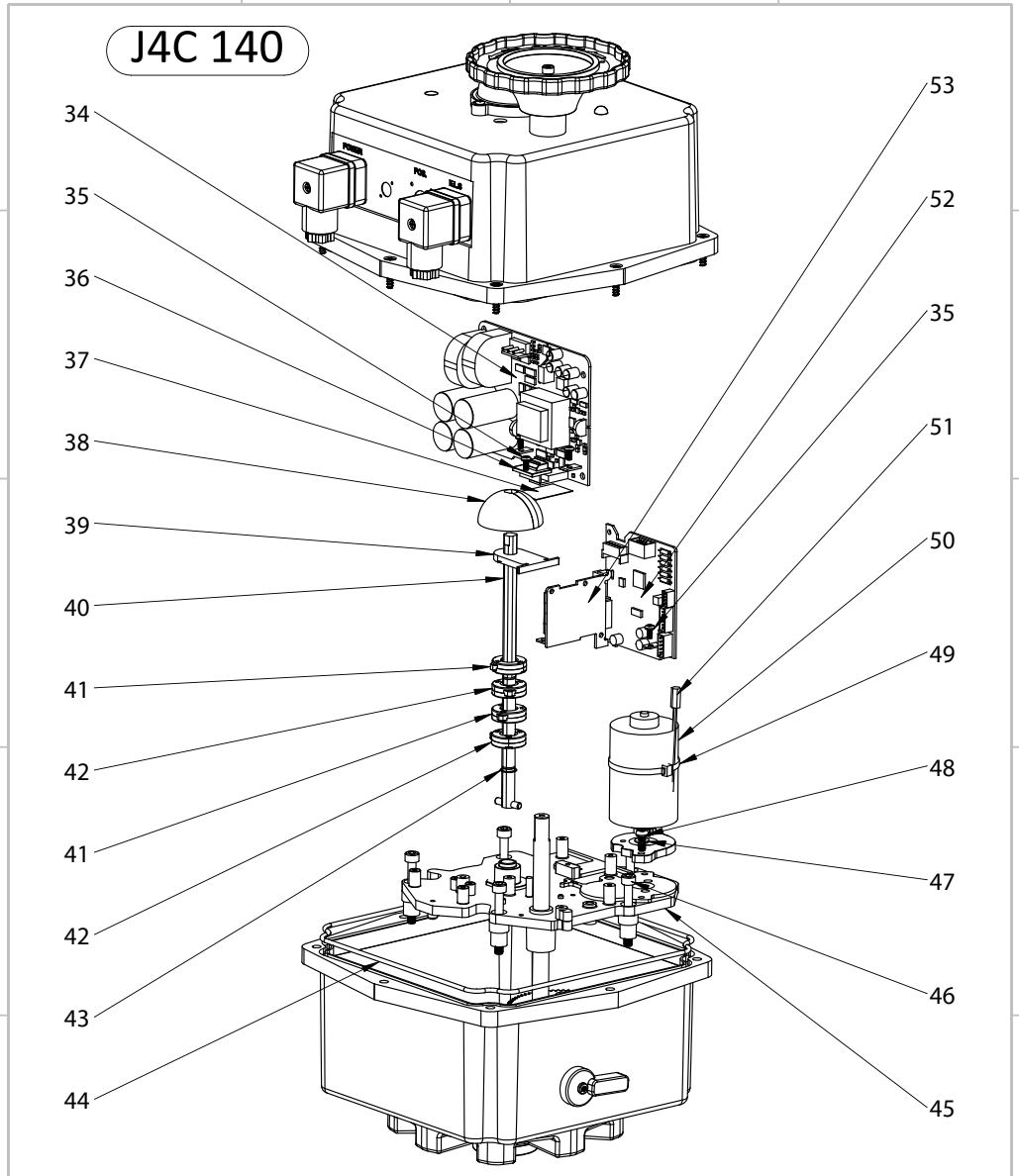

NÚMERO	CÓDIGO	CANTIDAD
34	AP01110	1(S TYPE)
34	AP01111	1 (B TYPE)
35	AP00080	5
36	AP01108	1
37	AP01045	1
38	MM00258	1
39	AP00161	1
40	AP00864	1
41	MM01211	2
42	MM01210	2
43	AP01000	1

NÚMERO	CÓDIGO	CANTIDAD
44	AP00423	1
45	AP01096	1
46	AP00964	5
47	AP00291	2
48	AP00911	2
49	AP00079	1
50	AP01057	1
51	AP00926	1
52	AP01066	1
52	+AP01126	1
53	MM01324	1

Exploded View

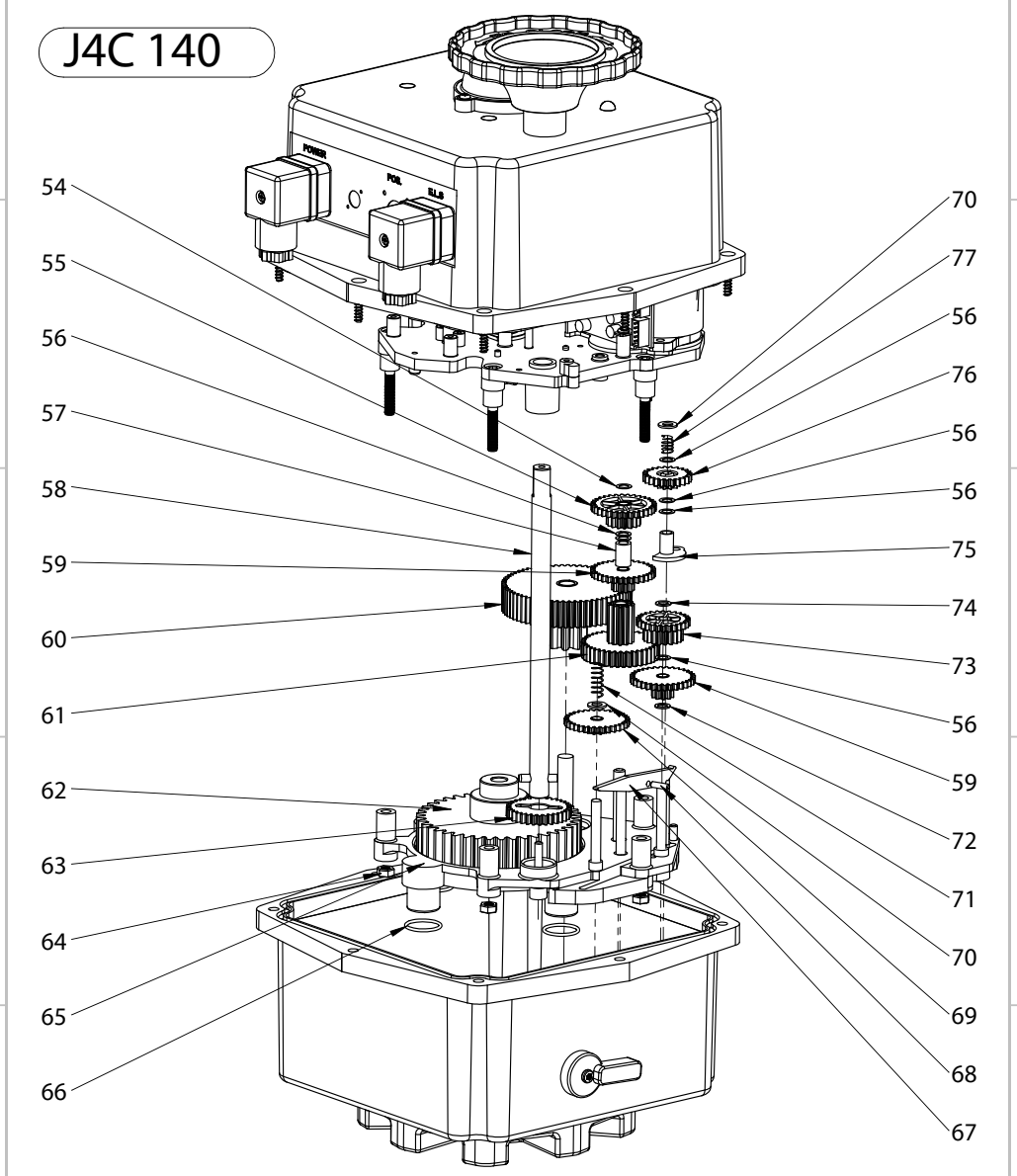

NÚMERO	CÓDIGO	CANTIDAD
54	AP01114	1
55	AP00928	1
56	AP00014	6
57	AP00312	1
58	MM01339	1
59	AP00145	2
60	AP00817	1
61	AP00818	1

NÚMERO	CÓDIGO	CANTIDAD
62	AP00816	1
63	AP00442	1
64	AP00965	5
65	AP00953	1
66	AP00963	4
67	AP00446	1
68	AP00307	1
69	AP00143	1

NÚMERO	CÓDIGO	CANTIDAD
70	AP00960	2
71	AP00867	1
72	AP00974	1
73	AP00951	1
74	AP00974	1
75	AP00835	1
76	AP00860	1
77	AP00865	1

Datasheet - J4C 300

GENERAL CHARACTERISTICS

Housing: Anticorrosive polyamide (lid & body)
Main external shaft: stainless steel
External screws: stainless steel
Gears: Steel and polyamide
Visual position indicator: Polyamide
Dome: Polycarbonate
Adjustable internal cams: Polyamide
Electric motor: 24VDC Brushless motor
Insulation: Class B
(IEC 60034) Service: S4

Model	S300	B300	H300
Voltage VDC/VAC 50/60Hz-0/+5%	24-240 VAC / 24-135 VDC	12 VDC/VAC ONLY	85- 240 VAC/VDC

Model	S300/B300/H300
Operation time unload	58 Sec./90^0
Maximum torque break	350 Nm / 3097,5 lb/in
Maximum operational torque	300 Nm / 2655 lb/in
Duty rating	75 %
Max. Working angle	0^0 to 270^0
Limit switch	4 SPST NO micro (2 motor stop and 2 confirmations)
Automatic heater	3,5 W
Big Plug	EN175301-803 FORM A
Small Plug	DIN43650/C
Protection IEC 60529 rating	IP67
Temperature	-20^{0}C +70^{0}C /-4^{0}F +158^{0}F
ISO 5211 Plate	Standard: F07/F10 Optional: F12
DIN 3337 Female output drive	Standard: *22 Optional: *17mm
Weight	4,7 Kg

Options

J4C 20/85 KIT DPS digital positioner:	4-20mA, 0-20mA, 0-10V or 1-10V
J4C 20/85 KIT BSR emergency fail safe kit system by battery	NC- NO
Potentiometer	1K, 5K or 10K
3 position actuator	0^0-45^0-90^0 or 0^0-90^0-180^0

J4C 300 SIZES

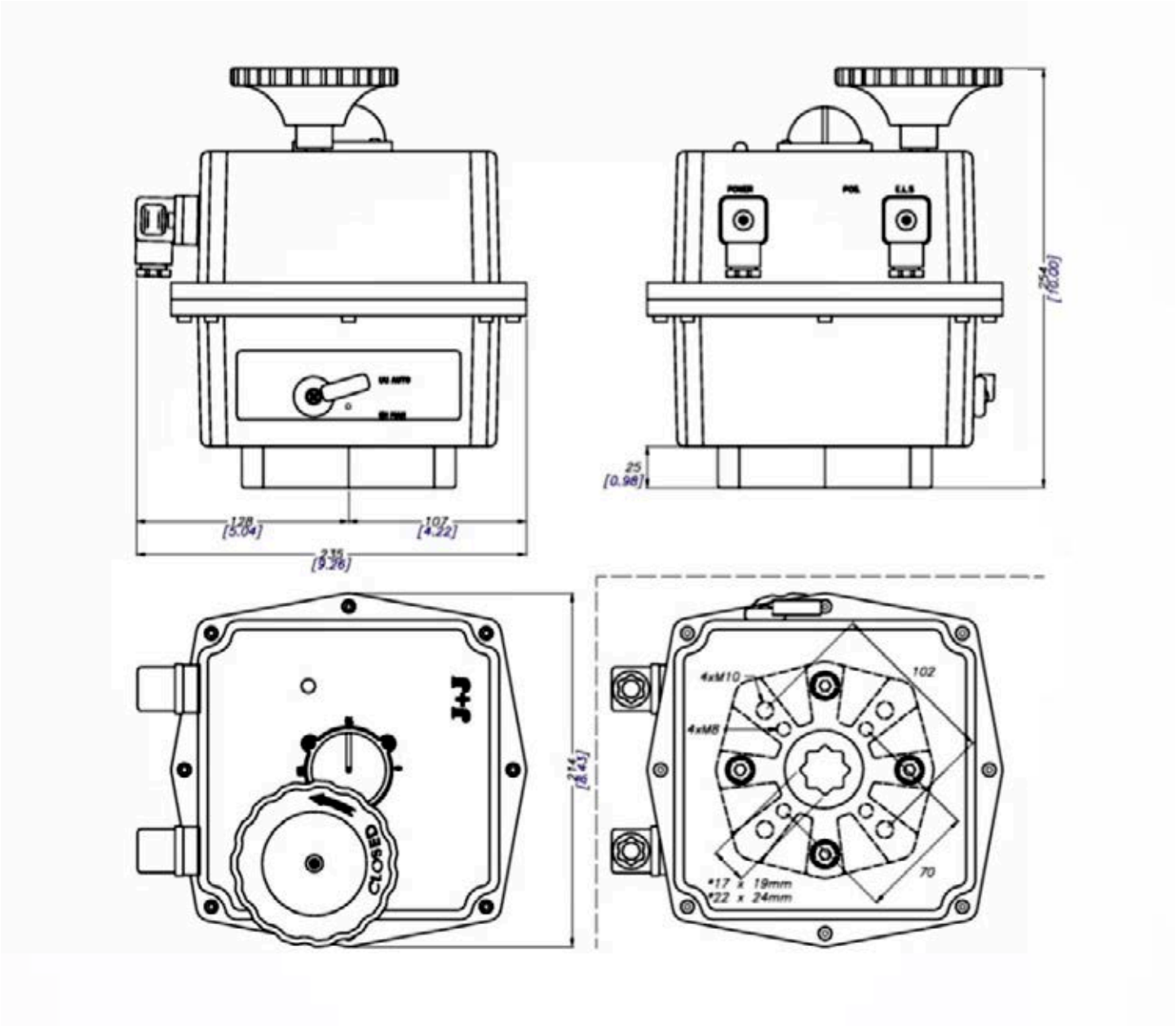

Exploded View

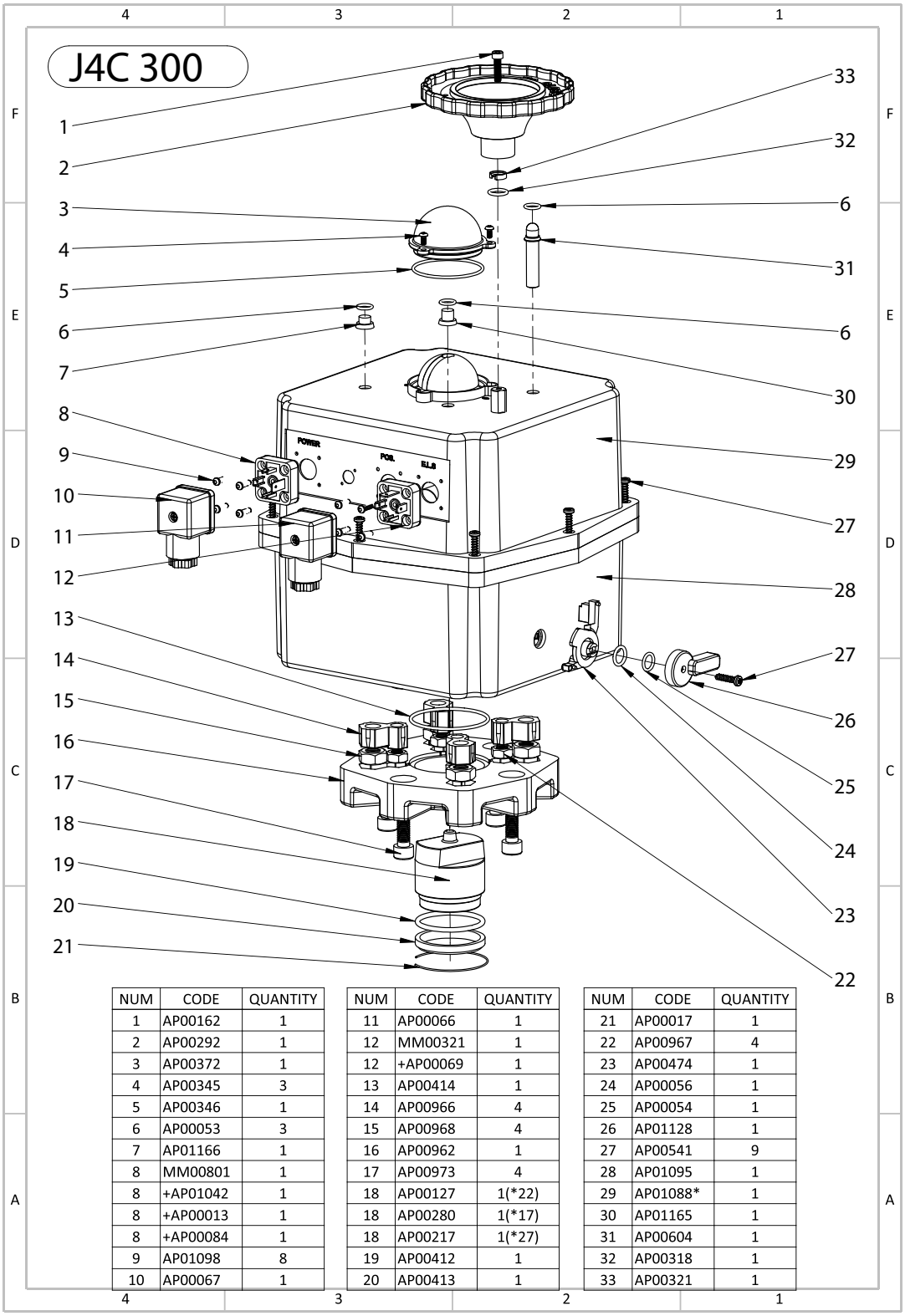

NUM	CODE	QUANTITY
1	AP00162	1
2	AP00292	1
3	AP00372	1
4	AP00345	3
5	AP00346	1
6	AP00053	3
7	AP01166	1
8	MM00801	1
8	+AP01042	1
8	+AP00013	1
8	+AP00084	1
9	AP01098	8
10	AP00067	1

NUM	CODE	QUANTITY
11	AP00066	1
12	MM00321	1
12	+AP00069	1
13	AP00414	1
14	AP00966	4
15	AP00968	4
16	AP00962	1
17	AP00973	4
18	AP00127	1(*22)
18	AP00280	1(*17)
18	AP00217	1(*27)
19	AP00412	1
20	AP00413	1

NUM	CODE	QUANTITY
21	AP00017	1
22	AP00967	4
23	AP00474	1
24	AP00056	1
25	AP00054	1
26	AP01128	1
27	AP00541	9
28	AP01095	1
29	AP01088*	1
30	AP01165	1
31	AP00604	1
32	AP00318	1
33	AP00321	1

Exploded View

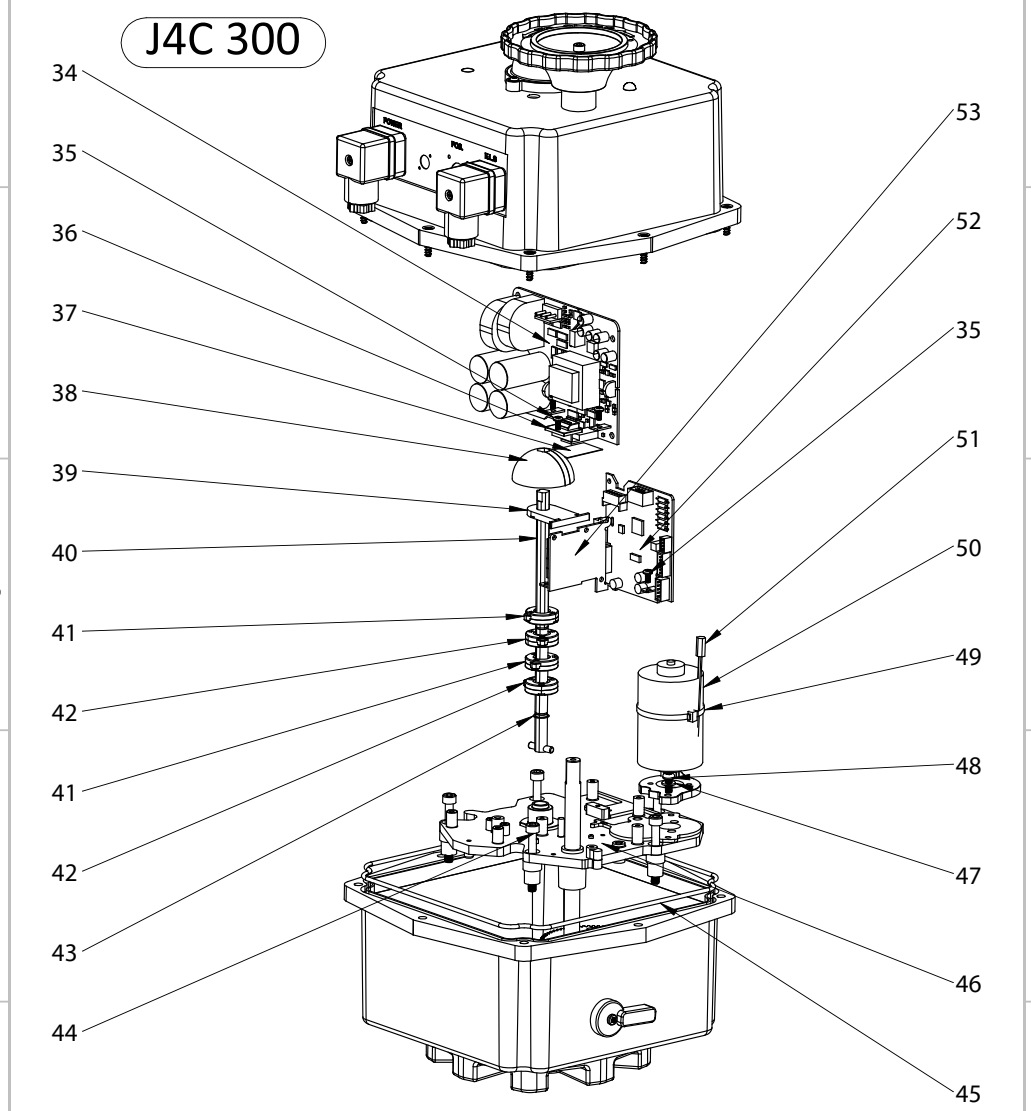

NÚMERO	CÓDIGO	CANTIDAD
34	AP01110	1(S TYPE)
34	AP01111	1(B TYPE)
35	AP00080	5
36	AP01108	1
37	AP01045	1
38	MM00258	1
39	AP00161	1
40	AP00864	1
41	MM01211	2
42	MM01210	2
43	AP01000	1

NÚMERO	CÓDIGO	CANTIDAD
44	AP00964	5
45	AP00423	1
46	AP01096	1
47	AP00291	2
48	AP00911	2
49	AP00079	1
50	AP01057	1
51	AP00926	1
52	AP01066	1
52	+AP01126	1
53	MM01324	1

Exploded View

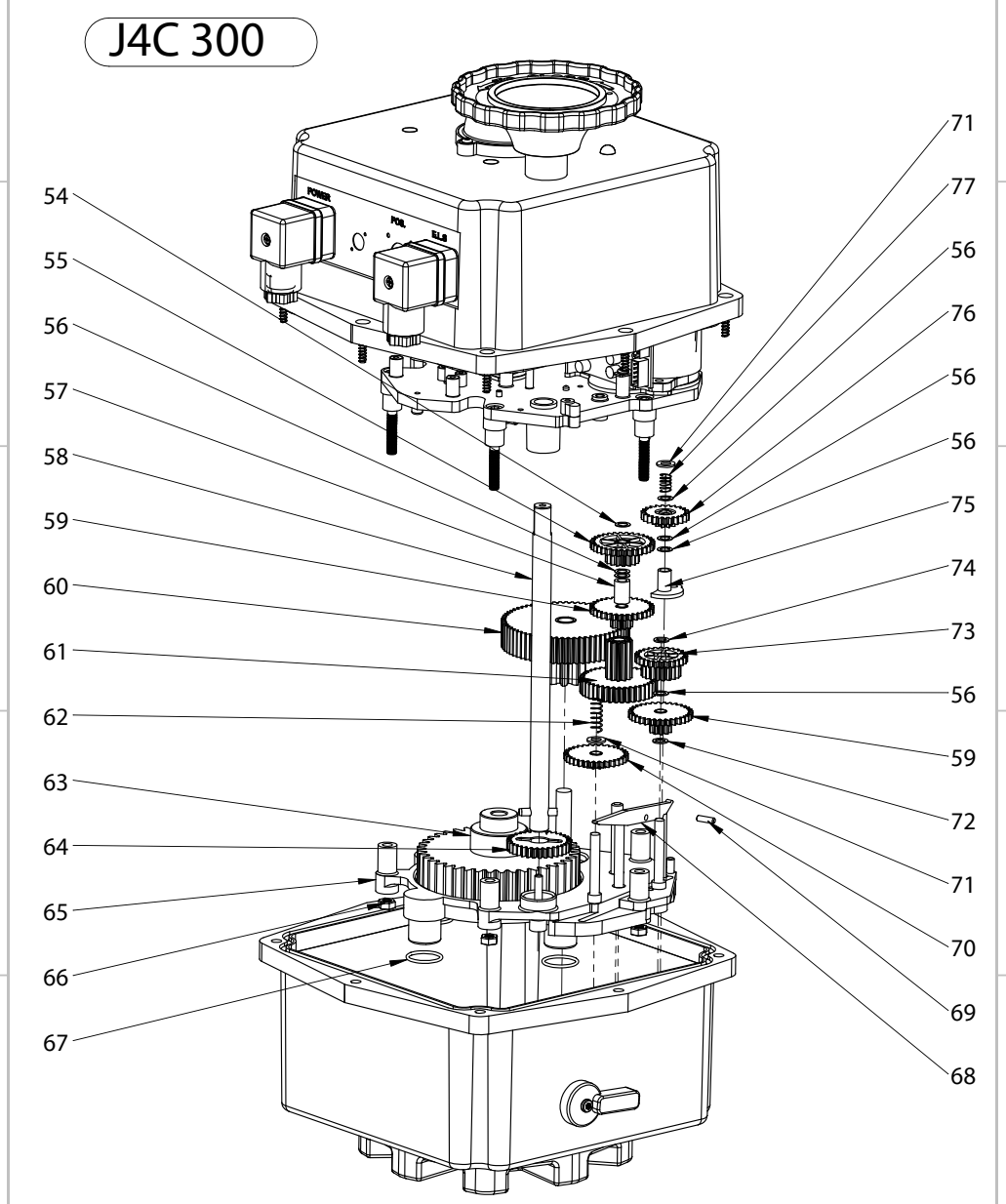

NÚMERO	CÓDIGO	CANTIDAD
54	AP01114	1
55	AP001133	1
56	AP00014	6
57	AP00312	1
58	MM01339	1
59	AP00145	2
60	AP00817	1
61	AP00818	1

NÚMERO	CÓDIGO	CANTIDAD
62	AP00867	1
63	AP00816	1
64	AP00442	1
65	AP00953	1
66	AP00965	5
67	AP00963	4
68	AP00446	1
69	AP00307	1

NÚMERO	CÓDIGO	CANTIDAD
70	AP00143	1
71	AP00960	2
72	AP00974	1
73	AP00951	1
74	AP01115	1
75	AP00835	1
76	AP00860	1
77	AP00865	1

04 Electric actuators with POSITIONER

DPS J4C 20/85

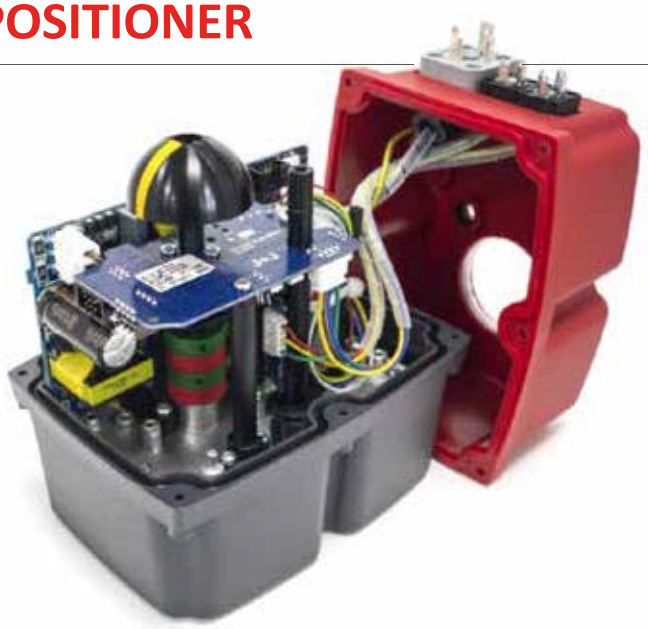

SPECIFICATIONS

MODEL	S20-B20-H20	S35-B35-H35	S55-B55-H55	S85-B85-H85
Accuracy	3 % F.S.	3 % F.S.	3 % F.S.	3 % F.S.
Linearity	2 % F.S.	2 % F.S.	2 % F.S.	2 % F.S.
Hysteresis	3 % F.S.	3 % F.S.	3 % F.S.	3 % F.S.
Steps at 4/20mA	Min.150 steps 90^0	Min.150 steps 90^0	Min.150 steps 90^0	Min.150 steps 90^0
Steps at 0/10V	Min.98 steps 90^0	Min.98 steps 90^0	Min.98 steps 90^0	Min.98 steps 90^0
Steps at 0/20mA	Min.150 steps 90^0	Min.150 steps 90^0	Min.150 steps 90^0	Min.150 steps 90^0
Steps at 1/10V	Min.87 steps 90^0	Min.87 steps 90^0	Min.87 steps 90^0	Min.87 steps 90^0
4/20mA or 0/20mA Input signal impedance	100 Ohm	100 Ohm	100 Ohm	100 Ohm
0/10V or 1/10V Input signal impedance	25 KOhm	25 KOhm	25 KOhm	25 KOhm
CLASS	B+C to E DIN EN 15714 Inching + Modulation			
WEIGHT	1,852 Kg	1,852 Kg	2,340 Kg	2,840 Kg

DPS J4C 20/85

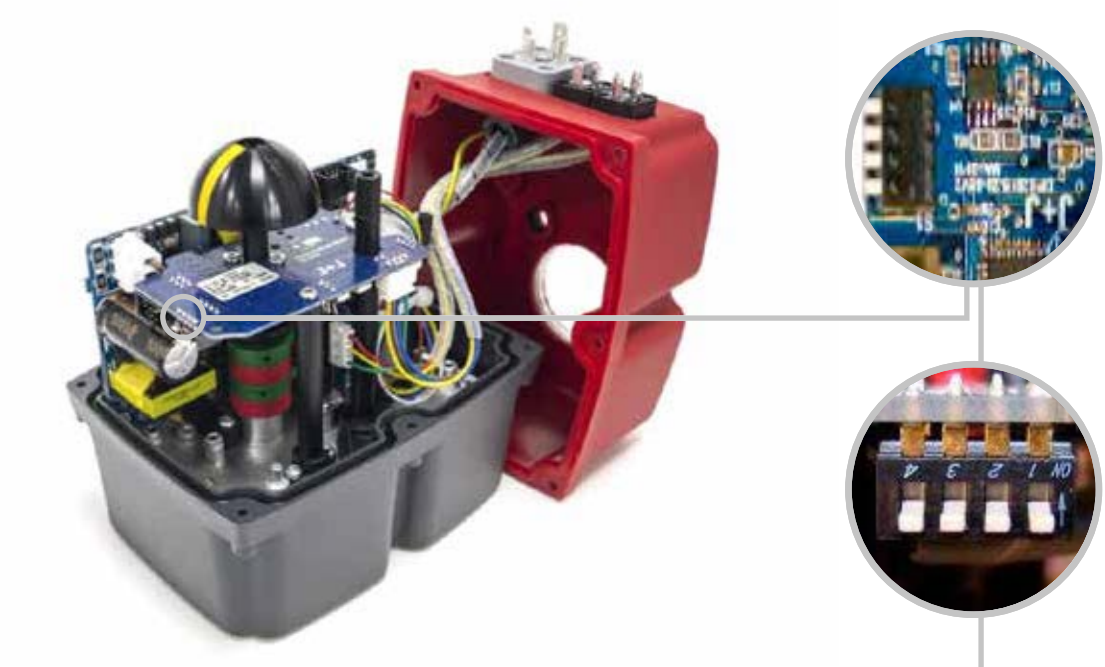

Use the configuration you need by moving the DIPs:
Different possibilities of configuration:

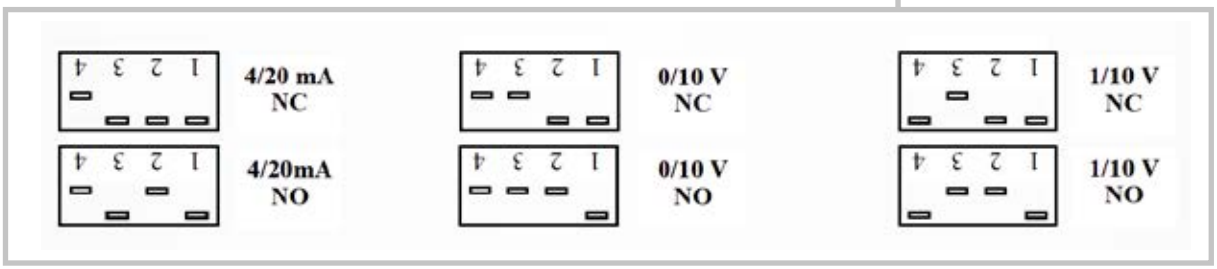

Configurations set up by using DIPs, should have the same Input and Output Signal.
I.e.: If Set up Input signal 4/20mA-Output signal 4/20 mA.
Other possibilities are available to work with, but they should be configurated from the manufacturer.

OTHER OPTIONS TO BE SET-UP BY THE MANUFACTURER OR WITH A J4C INTERFACE	
OUTPUT ONLY	4/20 mA, 0/10 V, 0/20 mA, 1/10 V
INPUT & OUTPUT	0/20 mA
MOTOR STOP, WITHOUT INSTUMENTATION	4/20 mA, 0/10 V, 0/20 mA, 1/10 V

If need Output signal different from Input signal, please ask the manufacturer.

DPS EXTERNAL SELF-ADJUSTMENT

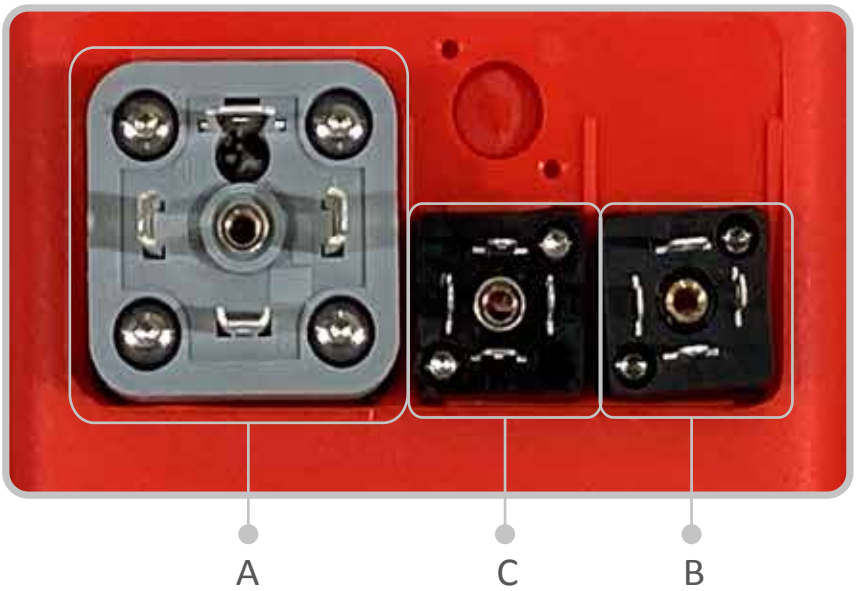

A- Power supply plug.

B- Volt free contact plug.

C- Input / Output signal (4/20mA,0/10V,0/20mA o 1/10V) plug.

1-C plug - connect a cable between PIN 1 (on the left side) and PIN Earth (on the bottom).
2-A plug - connect:

VAC: PIN1 (neutral) and PIN2 (phase).
VDC: PIN1 (negative) and PIN2 (positive).

*VERY IMPORTANT: BEFORE CONNECTING "A" PLUG TO THE ACTUATOR, CHECK THAT THE VOLTAGE IS THE SAME AS THE ONE SPECIFIED ON THE LABEL (CARTER).

3-C plug - disconnect the cable between PIN 1 (on the left side) and PIN Earth (on the bottom).

The actuator will make a complete maneuver and stay in the close position.
The actuator is ready to connect the (4/20mA,0/10V,0/20mA o 1/10V) signal to the **C** plug.

DPS J4C 140/300

SPECIFICATIONS

MODEL	S140-B140-H140	S300-B300-H300
Accuracy	3 % F.S.	3 % F.S.
Linearity	2 % F.S.	2 % F.S.
Hysteresis	3 % F.S.	3 % F.S.
Steps at 4/20mA	Min.150 steps 90^0	Min.150 steps 90^0
Steps at 0/10V	Min.98 steps 90^0	Min.98 steps 90^0
Steps at 0/20mA	Min.150 steps 90^0	Min.150 steps 90^0
Steps at 1/10V	Min.87 steps 90^0	Min.87 steps 90^0
4/20mA or 0/20mA Input signal impedance	100 Ohm	100 Ohm
0/10V or 1/10V Input signal impedance	25 KOhm	25 KOhm
CLASS	B+C to E DIN EN 15714 Inching + Modulation	
WEIGHT	4,750 Kg	

F.S. Full scale

DPS J4C 140/300

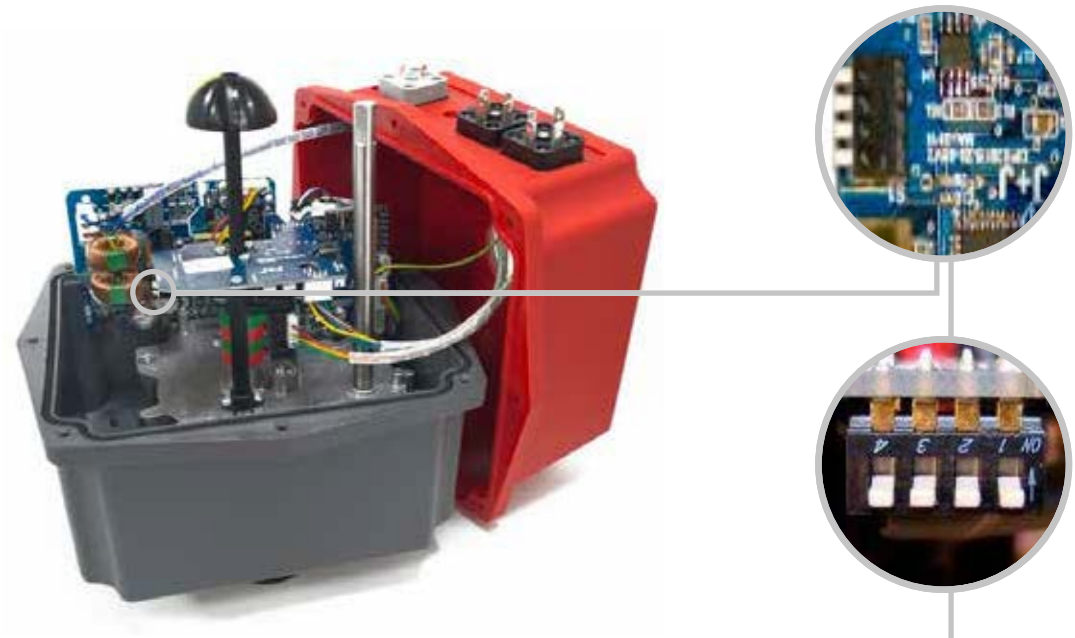

Use the configuration you need by moving the DIPs:
Different possibilities of configuration:

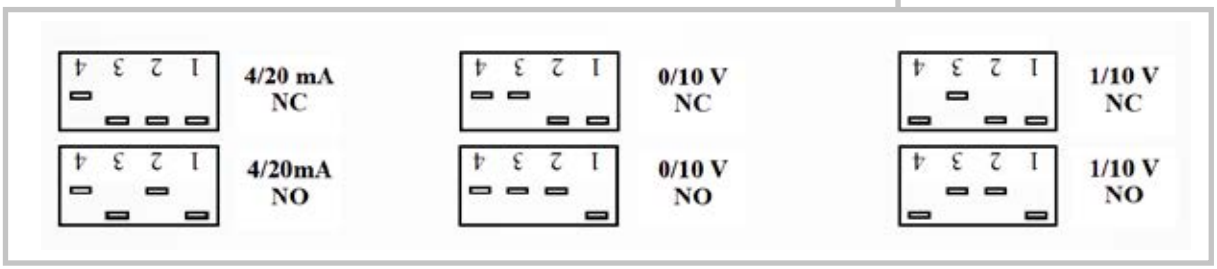

Configurations set up by using DIPs, should have the same Input and Output Signal.
I.e.: If Set up Input signal 4/20mA-Output signal 4/20 mA.
Other possibilities are avalilable to work with, but they should be configurated from the manufacturer.

OTHER OPTIONS TO BE SET-UP BY THE MANUFACTURER OR WITH A J4C INTERFACE	
OUTPUT ONLY	4/20 mA, 0/10 V, 0/20 mA, 1/10 V
INPUT & OUTPUT	0/20 mA
MOTOR STOP, WITHOUT INSTUMENTATION	4/20 mA, 0/10 V, 0/20 mA, 1/10 V

If need Output signal different from Input signal, please ask the manufacturer.

DPS EXTERNAL SELF-ADJUSTMENT

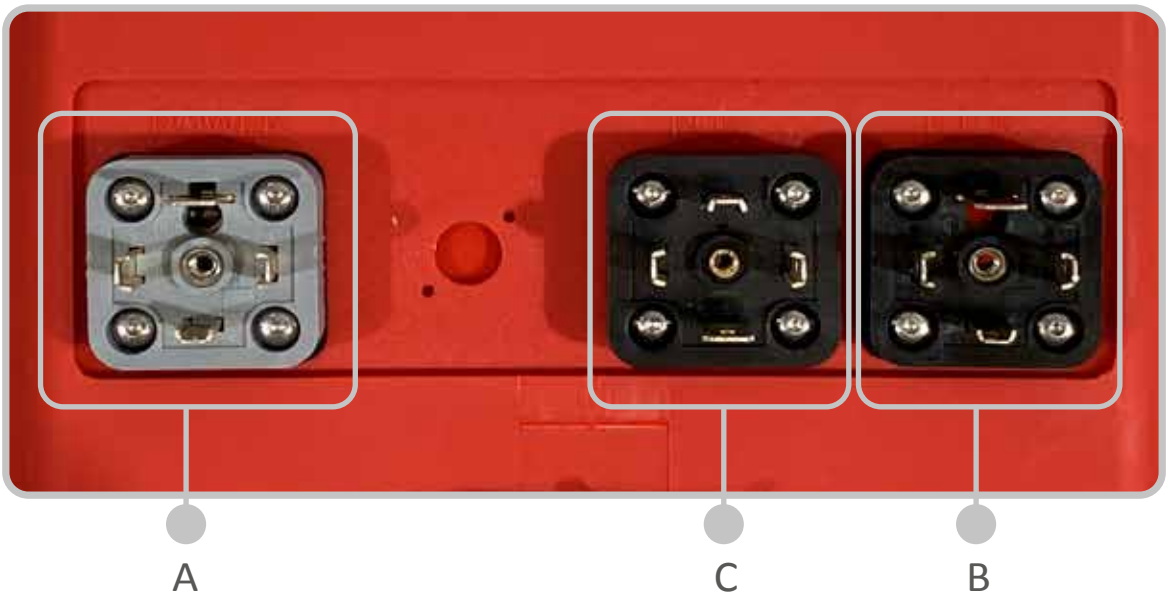

A- Power supply plug.

B- Volt free contact plug.

C- Input / Output signal (4/20mA,0/10V,0/20mA o 1/10V) plug.

1-C plug - connect a cable between PIN 1 (on the left side) and PIN Earth (on the bottom).
2-A plug - connect:
VAC: PIN1 (neutral) and PIN2 (phase).
VDC: PIN1 (negative) and PIN2 (positive).

*VERY IMPORTANT: BEFORE CONNECTING "A" PLUG TO THE ACTUATOR, CHECK THAT THE VOLTAGE IS THE SAME AS THE ONE SPECIFIED ON THE LABEL (CARTER).

3-B plug - disconnect the cable between PIN 1 (on the left side) and PIN Earth (on the bottom).

The actuator will make a complete maneuver and stay in the close position.
The actuator is ready to connect the (4/20mA,0/10V,0/20mA o 1/10V) signal to the **B** plug.

OPTIONS BSR

BSR J4C 20/85

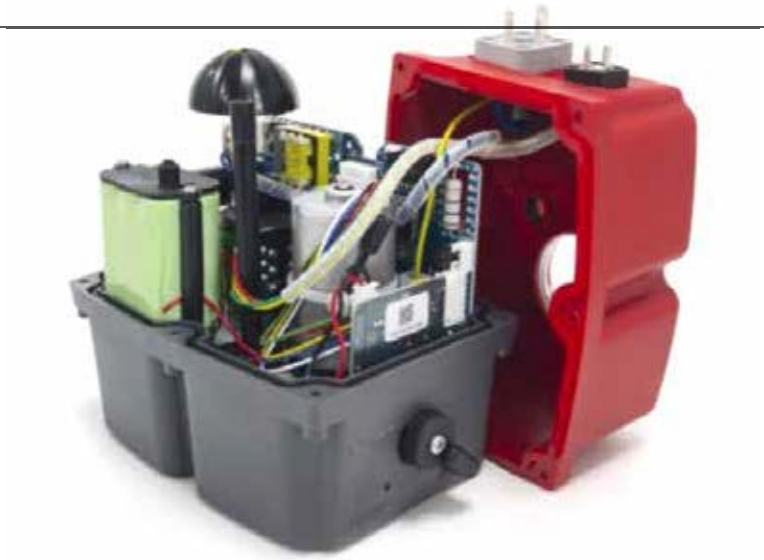

SPECIFICATIONS

ACTUATOR MODEL	S20-B20-H20	S35-B35-H35	S55-B55-H55	S85-B85-H85
No Working operation without recharge, with 100% battery charge	10	10	10	10
Recharge time/working operation	15 min	21 min	48 min	58 min
Battery consumption/working operation	2,2 W	3,0 W	6,8 min	8,3 min
Full charge time 100%	28 h	28 h	28 h	28 h
Nominal capacity +/- 5%	2200 mA	2200 mA	2200 mA	2200 mA
NO or NC Features (*)	Jumper	Jumper	Jumper	Jumper
Current/one working operation with battery	10,1 mA	14 mA	31,6 mA	38,6 mA
Battery charge	40 mA/h	40 mA/h	40 mA/h	40 mA/h
Weight	2,000 Kg	2,000 Kg	2,500 Kg	3,000 Kg

CONFIGURATIONS	A	B
PREFERRED POSITION IN CASE OF POWER CUT	(NC) NORMALLY CLOSE	(NO) NORMALLY OPEN

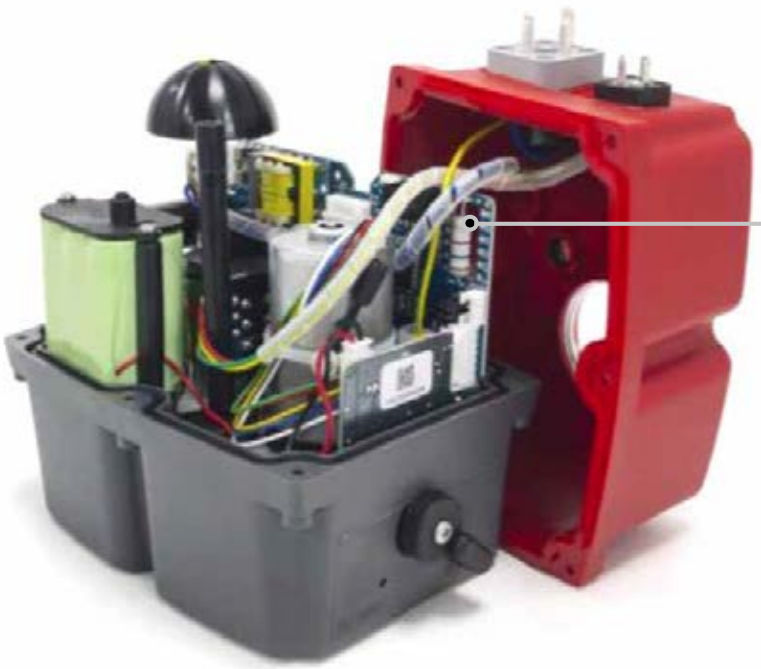

Jumper 1 **SELDIR**

NC Set-Up

NC- If, in case of a power supply failure, we need the actuator go to the CLOSE position, we need to put the jumper 1 on the SELDIR position.

NO Set-Up

NO- If, in case of a power supply fail- ure, we need the actuator go to the OPEN position, be sure that the jumper 1 is not on the SELDIR position.

(*) NO or NC Set-Up

BSR J4C 140/300

SPECIFICATIONS

ACTUATOR MODEL	S140-B140-H140	S300-B300-H300
Nº Working operation without recharge, with 100% battery charge	Until battery discharged	Until battery discharged
Recharge time/working operation	30 min	50 min
Battery consumption/working operation	23 W	23 W
Full charge time 100%	54 h	54 h
Nominal capacity +/- 5%	2200 mA	2200 mA
NO or NC Features (*)	Jumper	Jumper
Current/one working operation with battery	15,1 mA	25,7 mA
Battery charge	40 mA/h	40 mA/h
Weight	5,090 Kg	

CONFIGURATIONS	A	B
PREFERRED POSITION IN CASE OF POWER CUT	(NC) NORMALLY CLOSE	(NO) NORMALLY OPEN

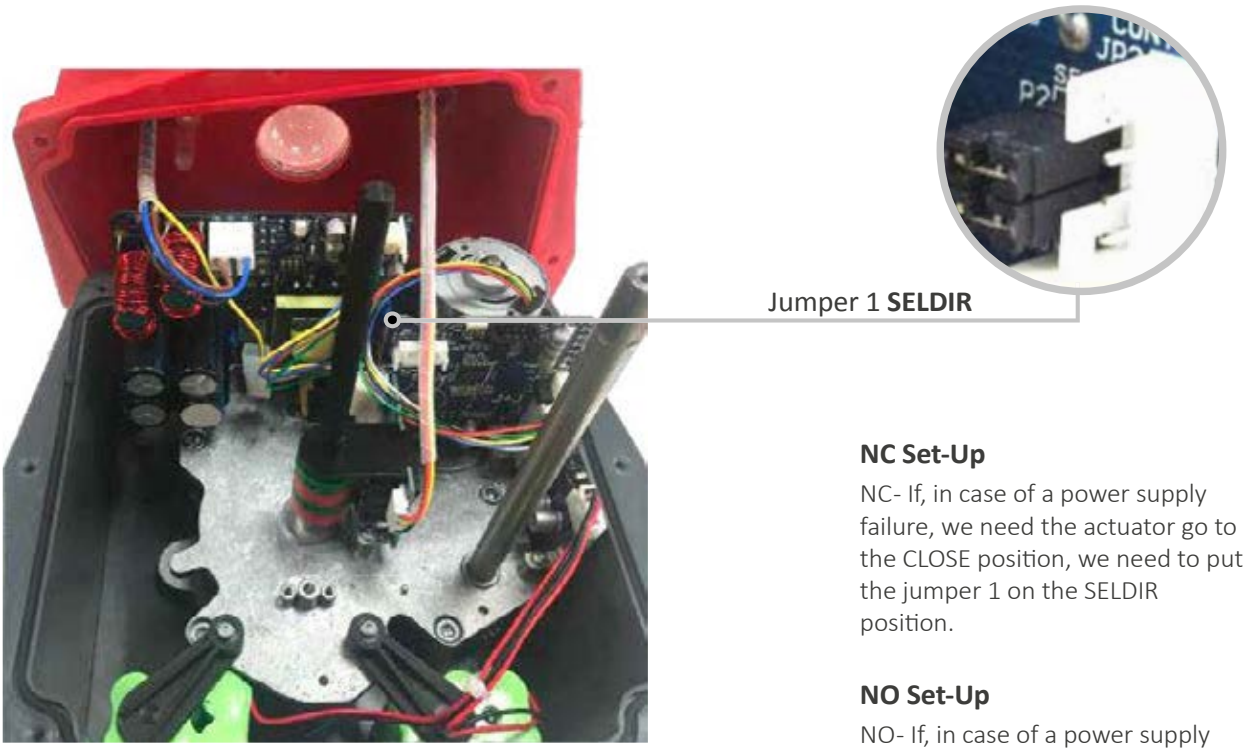

NC Set-Up

NC- If, in case of a power supply failure, we need the actuator go to the CLOSE position, we need to put the jumper 1 on the SELDIR position.

NO Set-Up

NO- If, in case of a power supply failure, we need the actuator go to the OPEN position, be sure that the jumper 1 is not on the SELDIR position.

(*) NO or NC Set-Up

05 KIT DPS J4C 20/85

The **DPS** is a device for the J4C electric actuator that turns the actuator into a servo controlled valve positioner.

The **DPS** is a modulus with a microprocessor (CPU) which digitally manages the analogical input and output and compare them with the position of the actuator to establish a uniform relation.

The analogical inputs are sent to the CPU where they are processed for his continuous comparison with the position of the actuator, this allows to obtain a very high sensitivity next to a very high repetitivity of the position (see characteristics).

The **DPS** in communication with the electronic system of the actuator provides an integral management of the motion of the actuator.

OUTSIDE BOX

INSIDE BOX

SPECIFICATIONS

MODEL	S20-B20-H20	S35-B35-H35	S55-B55-H55	S85-B85-H85
Accuracy	3 % F.S.	3 % F.S.	3 % F.S.	3 % F.S.
Linearity	2 % F.S.	2 % F.S.	2 % F.S.	2 % F.S.
Hysteresis	3 % F.S.	3 % F.S.	3 % F.S.	3 % F.S.
Steps at 4/20mA	Min.150 steps 90^0	Min.150 steps 90^0	Min.150 steps 90^0	Min.150 steps 90^0
Steps at 0/10V	Min.98 steps 90^0	Min.98 steps 90^0	Min.98 steps 90^0	Min.98 steps 90^0
Steps at 0/20mA	Min.150 steps 90^0	Min.150 steps 90^0	Min.150 steps 90^0	Min.150 steps 90^0
Steps at 1/10V	Min.87 steps 90^0	Min.87 steps 90^0	Min.87 steps 90^0	Min.87 steps 90^0
4/20mA or 0/20mA Input signal impedance	100 Ohm	100 Ohm	100 Ohm	100 Ohm
0/10V or 1/10V Input signal impedance	25 KOhm	25 KOhm	25 KOhm	25 KOhm
CLASS	B+C to E DIN EN 15714 Inching + Modulation			
WEIGHT	0,577 Kg			

F.S. Full scale

ASSEMBLY INSTRUCTIONS

PIECES

A - 1 Cover

B - 1 Plastic column

C - 1 DPS positioner PCB

D - 2 Sheet metal Fixing screws

E - 1 Plastic Fixing screws

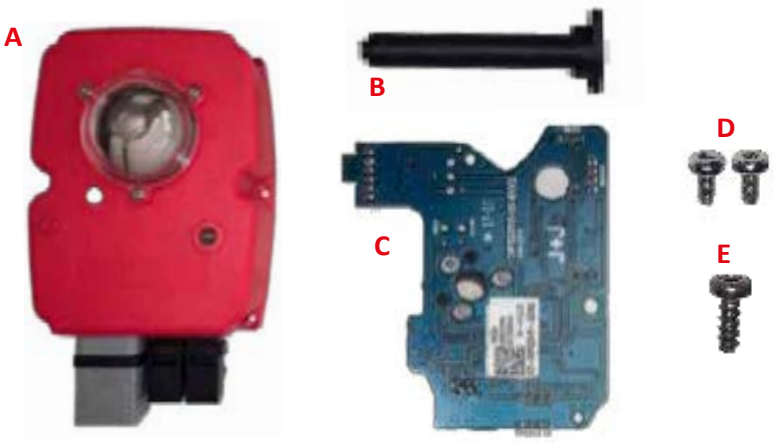

PREPARING THE COVER:

The cover of the kit is for a J4C-20, 35 and 55 models. In case you want to mount a kit on a J4C85, follow the instructions:

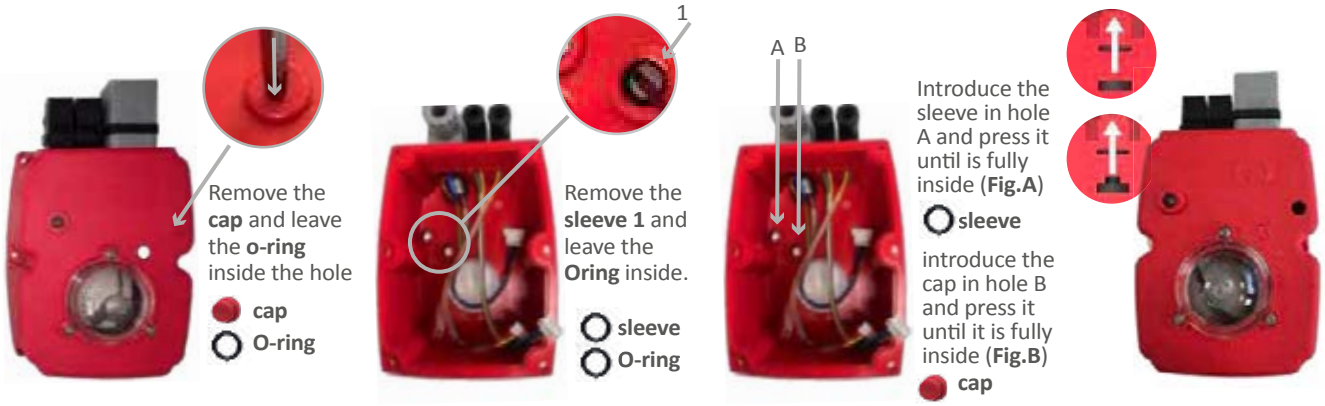

PLEASE READ CAREFULLY BEFORE MOUNTING.

VERY IMPORTANT!!!! PLEASE FOLLOW THE INSTRUCTIONS STEP BY STEP. BEFORE CONNECTING "A" PLUG TO THE ACTUATOR,

CHECK THAT THE VOLTAGE IS THE SAME AS THE ONE SPECIFIED ON THE LABEL (CARTER).

TO CONVERT A STANDARD (ON-OFF) J4C ELECTRIC ACTUATOR INTO A MODULATING FUNCTION WITH POSITIONER, PROCEED AS FOLLOWS:

ASSEMBLY INSTRUCTIONS

The unit must be disconnected from any electrical power or signal before installing.

1. Remove the screw, which is fixing the hand wheel. **(Fig. 2)**
2. Remove the 6 screws, which are fixing the body to the cover of the actuator **(Fig.3)**.
3. Carefully lift the cover **(Fig.4)**.
4. Remove the cables (from the cover) connected to the actuator PCB **(Fig.5A,5B and 5C)**.
5. Carefully remove the position indicator **(Fig.6)**.
6. Fix the plastic column (B) on the base plate, by using 2 sheet metal fixing screws **(D)(Fig.7A,7B and 7C)**.
7. Take the DPS cover (A) and connect its cables, following **(Fig.8A,8B and 8C)**.
8. Place the mentioned cables as per **(Fig.9A and 9B)**.
9. Mount the DPS positioner PCB (C), matching the cleft of the shaft with the key inside the DPS gear **(Fig.10)**.
10. Press the DPS positioner PCB (C) along the shaft until the PCB connector (JP3) is plugged in the actuator PCB connector (JP2) **(Fig.11).**
11. Fix the DPS positioner PCB (C) to the plastic column (B) with the plastic fixing screw **(E) (Fig.12A)**.
12. Connect the remaining cable (A) to the connector base on the DPS PCB **(C) (Fig. 12B)**.
13. Carefully insert the position indicator, matching its inner key with the cleft of the shaft **(Fig.13)**.
14. In order to set the actuator up, use the DIPs shown in picture **(Fig.14)**. Put DIP 1 in ON position, connect the grey connector to the power supply, put DIP 1 back to the prior position. Wait until the actuator make a complete maneuver **(Fig. 14A and 14B)**.
15. Disconnect the grey connector from the power supply.
16. Use the configuration you need by moving the DIPs, according to the instrumentation signal **(Fig. 15)**

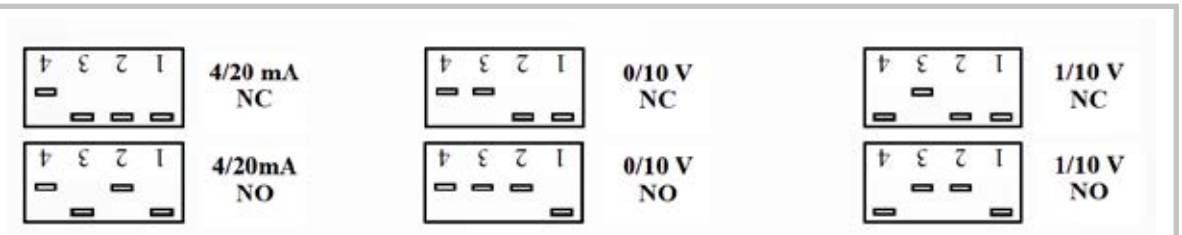

17. Care- fully mount the cover, minding the cables not to be pressed **(Fig.16).**
18. Fix the cover to the body by using the 6 screws **(Fig.17)**.
19. Mount the hand wheel on the shaft and fix it by using the screw **(Fig.18)**.
20. Mount the 3 outer connectors together with its rubber joints and fix them to the cover, by using the screws **(Fig.19).**
21. Fill in the document inside the kit, and send it to the fax number or e-mail, shown in the document The unit is ready to work.

Outer Set-Up: Only if necessary.

- B plug - Connect a cable between PIN 1 and PIN Earth (Fig. 20).
- A plug - Connect it to the power supply.
- B plug, disconnect the cable between PIN 1 and PIN Earth.

The actuator will make a complete maneuver.
Connect B connector to the actuator. The actuator is ready to work.

ASSEMBLY INSTRUCTIONS

KIT DPS J4C 140/300

The **DPS** is a device for the J4C electric actuator that turns the actuator into a servo controlled valve positioner.

The **DPS** is a modulus with a microprocessor (CPU) which digitally manages the analogical input and output and compare them with the position of the actuator to establish a uniform relation.

The analogical inputs are sent to the CPU where they are processed for his continuous comparison with the position of the actuator, this allows to obtain a very high sensitivity next to a very high repetitivity of the position (see characteristics).

The **DPS** in communication with the electronic system of the actuator provides an integral management of the motion of the actuator.

OUTSIDE BOX

INSIDE BOX

SPECIFICATIONS

MODEL	S140-B140-H140	S300-B300-H300
Accuracy	3 % F.S.	3 % F.S.
Linearity	2 % F.S.	2 % F.S.
Hysteresis	3 % F.S.	3 % F.S.
Steps at 4/20mA	Min.150 steps 90^0	Min.150 steps 90^0
Steps at 0/10V	Min.98 steps 90^0	Min.98 steps 90^0
Steps at 0/20mA	Min.150 steps 90^0	Min.150 steps 90^0
Steps at 1/10V	Min.87 steps 90^0	Min.87 steps 90^0
4/20mA or 0/20mA Input signal impedance	100 Ohm	100 Ohm
0/10V or 1/10V Input signal impedance	25 KOhm	25 KOhm
CLASS	B+C to E DIN EN 15714 Inching + Modulation	
WEIGHT	0,963 Kg	

F.S. Full scale

ASSEMBLY INSTRUCTIONS

PIECES

A - 1 Cover

B - 1 Plastic column

C - 1 DPS positioner PCB

D - 2 Sheet metal Fixing screws

E - 1 Plastic Fixing screws

F - 1 Schematic diagram label

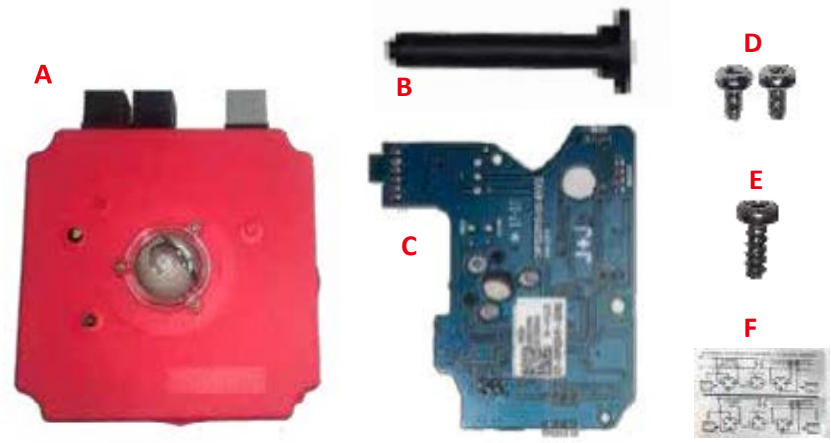

PLEASE READ CAREFULLY BEFORE MOUNTING.

VERY IMPORTANT!!!! PLEASE FOLLOW THE INSTRUCTIONS STEP BY STEP. BEFORE CONNECTING "A" PLUG TO THE ACTUATOR, CHECK THAT THE VOLTAGE IS THE SAME AS THE ONE SPECIFIED ON THE LABEL (CARTER).

TO CONVERT A STANDARD (ON-OFF) J4C ELECTRIC ACTUATOR INTO A MODULATING FUNCTION WITH POSITIONER, PROCEED AS FOLLOWS:

The unit must be disconnected from any electrical power or signal before installing.

1. Remove the screw, which is fixing the hand wheel. **(Fig.2A and 2B)**
2. Remove the 8 screws, which are fixing the body to the cover of the actuator **(Fig.3)**.
3. Carefully lift the cover **(Fig.4)**.
4. Remove the cables (from the cover) connected to the actuator PCB **(Fig.5A, 5B & 5C)**.
5. Carefully remove the position indicator **(Fig.6)**.
6. Fix the plastic column (B) on the base plate, by using 2 sheet metal fixing screws (D) **(Fig.7A,7B & 7C)**.
7. Take the DPS cover (A) and connect its cables, following **(Fig.8A, 8B & 8C)**.
8. Mount the DPS positioner PCB inside the kit (C), matching the cleft of the shaft with the key inside the DPS gear **(Fig.9)**.
9. Press the DPS positioner PCB (C) along the shaft until the PCB connector (JP3) is plugged in the actuator PCB connector (JP2) **(Fig.10)**.
10. Fix the DPS positioner PCB (C) to the plastic column (B) with the plastic fixing screw (E) **(Fig.11A)**.
11. Connect the remaining cable from the kit cover (A) to the connector base on the DPS PCB (C) **(Fig.11B).**
12. Carefully insert the position indicator, matching its inner key with the cleft of the shaft **(Fig.12)**.
13. In order to set the actuator up, use the DIPs shown in picture **(Fig.13)**.

    Put DIP 1 in ON position, connect the grey connector to the power supply, put DIP 1 back to the prior position. Wait until the actuator make a complete maneuver **(Fig.13A and 13B)**.

ASSEMBLY INSTRUCTIONS

14. Disconnect the grey connector from the power supply.
15. Use the configuration you need by moving the DIPs, according to the instrumentation signal **(Fig.14)**:

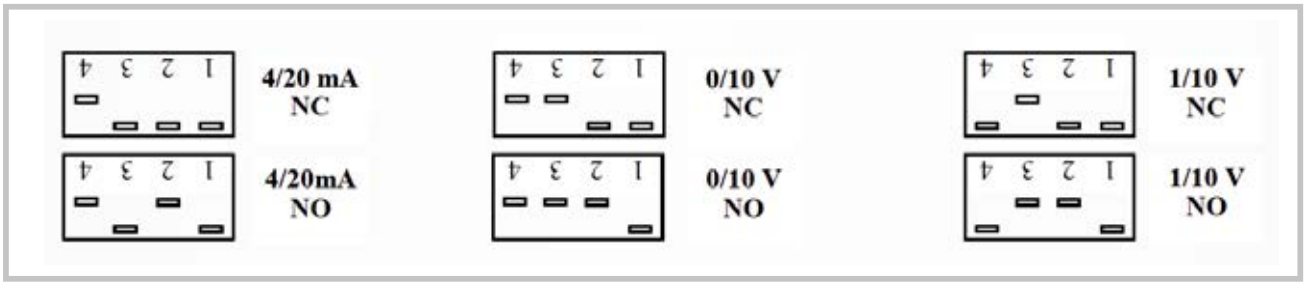

16. Carefully mount the cover, minding the cables not to be pressed **(Fig.15)**.
17. Fix the cover to the body by using the 8 screws **(Fig.16).**
18. Mount the hand wheel on the shaft and fix it by using the screw **(Fig.17).**
19. Mount the 3 outer connectors together with its rubber joints and fix them to the cover, by using the screws **(Fig.18)**.
20. Remove the wiring label from the actuator and replace it by the one inside the kit box **(F)**.
21. Fill in the document inside the kit, and send it to the fax number or e-mail, shown in the document. The actuator is ready to work.

Outer Set-Up: Only if necessary.

- B plug - Connect a cable between PIN 1 and PIN Earth **(Fig.19)**.
- A plug - Connect it to the power supply.
- B plug, disconnect the cable between PIN 1 and PIN Earth.
  The actuator will make a complete maneuver.
  Connect and fix the B outer connector to the actuator. The actuator is ready to work.

ASSEMBLY INSTRUCTIONS

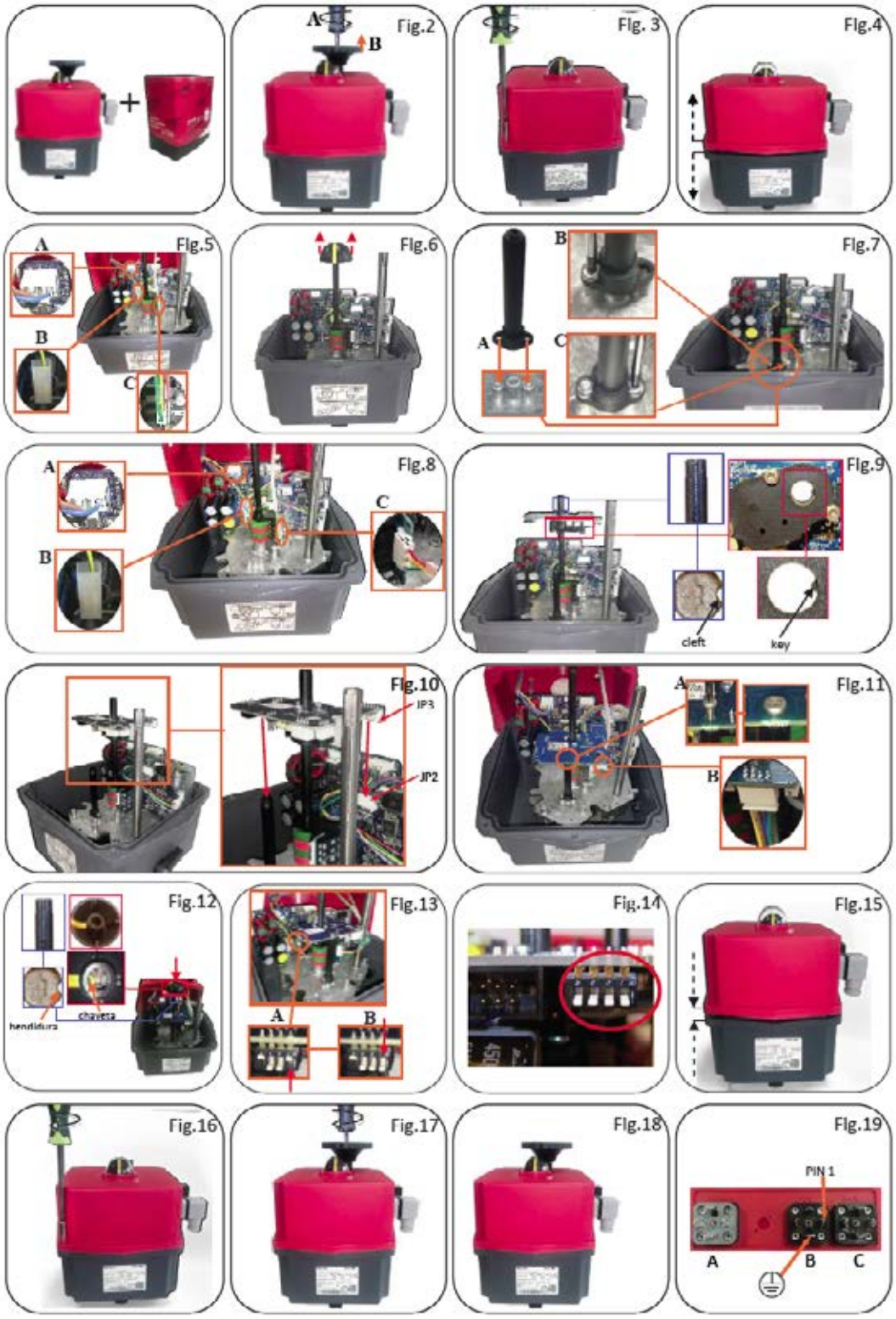

KIT BSR J4C 20/85

The **BSR** safety block system is an automatism that, when coupled to the J4C multi voltage electric actuators, lets the valve situate in a preferable position NC or NO, when there is a power supply failure. Inside of the housing there are a **BSR** print circuit board and a battery pack, which is kept in continuous charge.

In case of the valve is not in the preferable position and there is a power supply cut, the **BSR** system returns the valve back to the preferable position by means of the batteries tension, operating as a "single acting" actuator.

OUTSIDE BOX

INSIDE BOX

ACTUATOR MODEL	S20-B20-H20	S35-B35-H35	S55-B55-H55	S85-B85-H85
Nº Working operation without recharge, with 100% battery charge	Until battery discharged	Until battery discharged	Until battery discharged	Until battery discharged
Recharge time/working operation	15 min	21 min	48 min	58 min
Battery consumption/working operation	2,2 W	3,0 W	6,8 W	8,3 W
Full charge time 100%	28 h	28 h	28 h	28 h
Nominal capacity +/- 5%	2200 mA	2200 mA	2200 mA	2200 mA
NO or NC Features (*)	Jumper	Jumper	Jumper	Jumper
Current/one working operation with battery	10,1 mA	14 mA	31,6 mA	38,6 mA
Battery charge	40 mA/h	40 mA/h	40 mA/h	40 mA/h
Weight	0,309 Kg			

MOUNTING INSTRUCTIONS

VERY IMPORTANT:

PLEASE, FOLLOW THESE INSTRUCTIONS STEP BY STEP.IF THE CONNECTOR OF THE BATTERY PACK IS PLUGED TO THE "BSR" PCB, BEFORE ARRIVING TO POINT 7, THE PCB COULD BE DAMAGED.

KIT COMPONENTS

A 1 BSR PCB.

B 1 Lower battery support.

C 1 Battery pack.

D 1 Upper battery support.

E 3 Sheet metal Fixing screws

F 2 Plastic Fixing screws

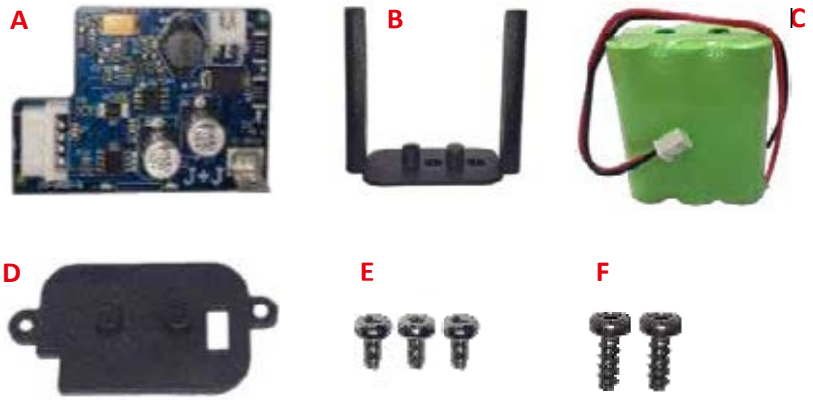

1. Remove the hand wheel screws and take it off. **(Fig. 1)**.
2. Remove the 6 screws between the cover and the body of the actuator.**(Fig.2)**.
3. Carefully remove the cover, in order to install the kit. **(Fig.3)**.
4. Take the BSR PCB (A) from the KIT and connect it to the actuator PCB, by using the connector Shown in picture. See **(Fig.4)**. Fix it to the actuator metal plate, by using the Sheet metal fixing screw (E). See **(Fig.5)**.
5. Put the lower battery support (B). See **(Fig.6A)**. Fix it by using 2 Sheet metal fixing screws (E) **(Fig.6B & 6C)**.
6. Place the battery pack (C) on the lower battery support (B) **(Fig.7B)**. The battery cables should remain on the bottom part. Put the cables, as shown in the picture **(Fig.7A)**.
7. Connect the battery cables to the BSR PCB (A), as per **(Fig.7C)**.
8. Place the upper battery support (D) **(Fig.8A)** and fix it to the columns of the lower battery support (B), by using the Plastic fixing screws (F) **(Fig.8B & 8C).**
9. BSR Configuration NO or NC **(Fig.9)**:
   NC (normally close) SELDIR jumper ON.
   NO (normally open) SELDIR jumper OFF.
10. Carefully replace the cover and be sure that the joint is correctly lodged in its place. See **(Fig.10)**. Be sure that any cable is not trapped between the cover and the body.
11. Fix the 6 screws, between the cover and the body. See **(Fig.11).**
12. Reassemble the hand wheel and fix it with the screws. See **(Fig.12)**.
13. Fill in the blanks of the document inside the BSR KIT and send it back to the supplier, via fax or mail.

Now, the actuator is ready to work.

We strongly recommend to put the power on, send the actuator to an intermediate position and check that, after putting the power off, the actuator goes to the pervious set-up position (NC or NO).

ASSEMBLY INSTRUCTIONS

Fig 1

Fig.2

Fig.3

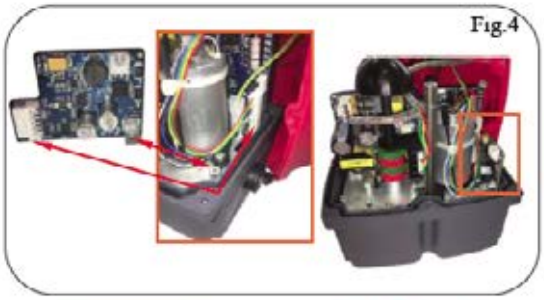
Fig.4

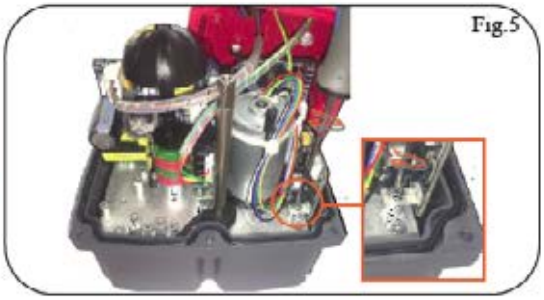
Fig.5

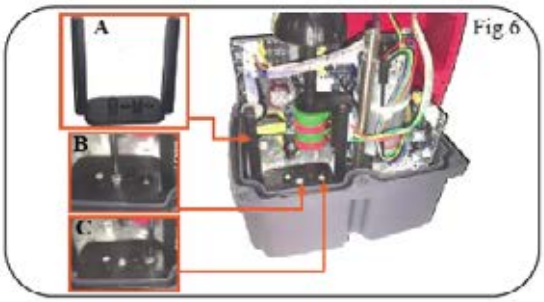

Fig 6

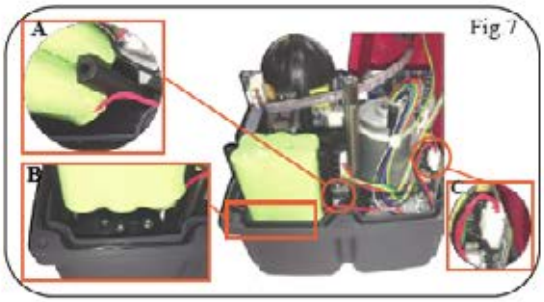

Fig 7

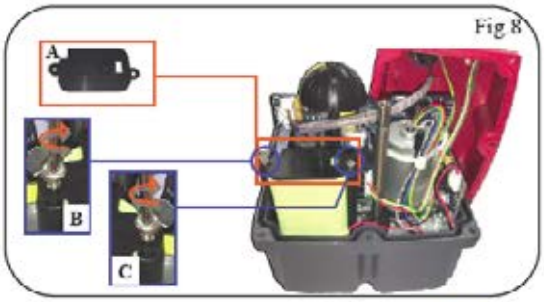

Fig 8

Fig 9

Fig 10

Fig.11

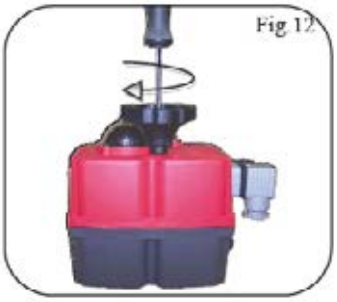
Fig 12

KIT BSR J4C 140/300

The **BSR** safety block system is an automatism that, when coupled to the J4C multi voltage electric actuators, lets the valve situate in a preferable position NC or NO, when there is a power supply failure. Inside of the housing there are a **BSR** print circuit board and a battery pack, which is kept in continuous charge.

In case of the valve is not in the preferable position and there is a power supply cut, the **BSR** system returns the valve back to the preferable position by means of the batteries tension, operating as a “single acting” actuator.

OUTSIDE BOX

INSIDE BOX

ACTUATOR MODEL	S140-B140-H140	S300-B300-H300
Nº Working operation without recharge, with 100% battery charge	Until battery discharged	Until battery discharged
Recharge time/working operation	30 min	50 min
Battery consumption/working operation	23 W	23 W
Full charge time 100%	54 h	54 h
Nominal capacity +/- 5%	2200 mA	2200 mA
NO or NC Features (*)	Jumper	Jumper
Current/one working operation with battery	15,1 mA	25,7 mA
Battery charge	40 mA/h	40 mA/h
Weight	0,487 Kg	

MOUNTING INSTRUCTIONS

VERY IMPORTANT:

PLEASE, FOLLOW THESE INSTRUCTIONS STEP BY STEP.IF THE CONNECTOR OF THE BATTERY PACK IS PLUGED TO THE "BSR" PCB, BEFORE ARRIVING TO POINT 4, THE PCB COULD BE DAMAGED.

KIT COMPONENTS

A 1 BSR PCB.

B 2 Battery support.

C 2 Battery pack.

D 3 Sheet metal Fixing screws

E 1 Plastic clamp

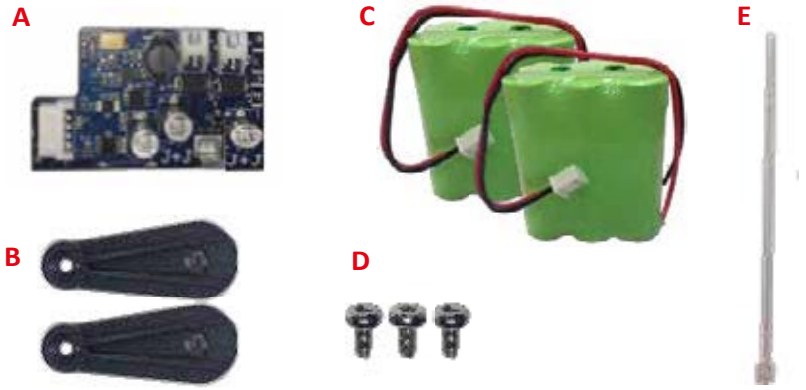

1. Remove the hand wheel screw and take it off. **(Fig. 1A & 1B).**
2. Remove the 8 screws between the cover and the body of the actuator. **(Fig.2).**
3. Carefully remove the cover, in order to install the kit. **(Fig.3)**.
4. Take the BSR PCB (A) from the KIT and connect it to the actuator PCB, by using the connector shown in the picture. See **(Fig.4)**. Fix it to the actuator metal plate, by using the Sheet metal fixing screw (D). See **(Fig.5).**
5. Place the 2 battery packs (C) as per picture **(Fig.6A & 6B)**.
6. Place the battery supports (B), as per picture **(Fig. 7A & 7B)**.
7. Fix the battery supports (B), with the sheet metal fixing screws (D) **(Fig. 8A & 8B)**.
8. Connect the battery cables to the BSR PCB (A), as per **(Fig.8C)**.
9. Put both battery cables (C) together with the plastic clamp (E) **(Fig. 8D)**. Cut the remaining part of the plastic clamp (E).
10. BSR Configuration NO or NC **(Fig.9)**:
    NC (normally close) SELDIR jumper ON.
    NO (normally open) SELDIR jumper OFF.
11. Carefully replace the cover and be sure that the joint is correctly lodged in its place. See **(Fig.10)**. Be sure that any cable is not trapped between the cover and the body.
12. Fix the 8 screws, between the cover and the body. See **(Fig.11)**.
13. Reassemble the hand wheel and fix it with the screw. See **(Fig.12)**.
14. Fill in the blanks of the document inside the BSR KIT and send it back to the supplier, via fax or mail.
    Now, the actuator is ready to work.

We strongly recommend to put the power on, send the actuator to an intermediate position and check that, after putting the power off, the actuator goes to the pervious set-up position (NC or NO).

ASSEMBLY INSTRUCTIONS

Fig.1

Fig.2

Fig.3

Fig.4

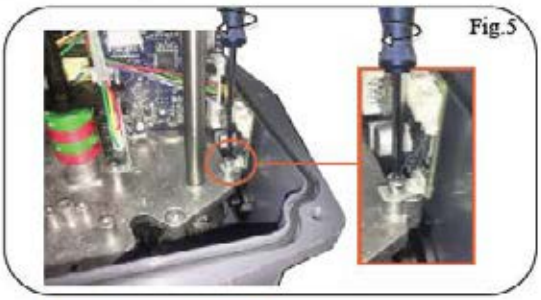
Fig.5

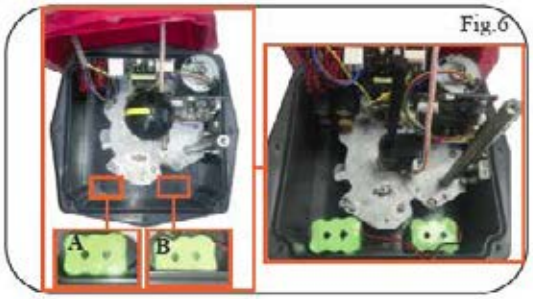

Fig.6

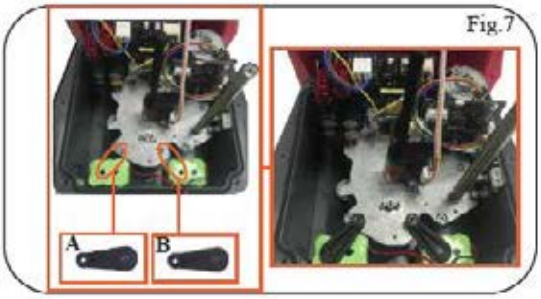

Fig.7

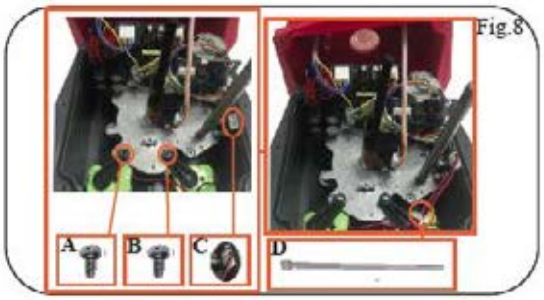

Fig.8

Fig.9

Fig.10

Fig.11

Fig.12

KIT INTERFACE

By using the INTERFACE KIT cable we stablish communication with the actuator, read parameters and change the set-up values.

INTERFACE PROGRAM for PC INSTALLATION:

Download the Interface program from:
https://www.dropbox.com/sh/4qgczg8zspwtehc/AABD0TkZouJ2-DXxidzk8Jera?dl=0

1 · Download the file

2 · unzip and open it

3 · Click on the file

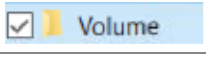

4 · Run the program and log in.

5· Programe set-up

5.1 Click on “Next”

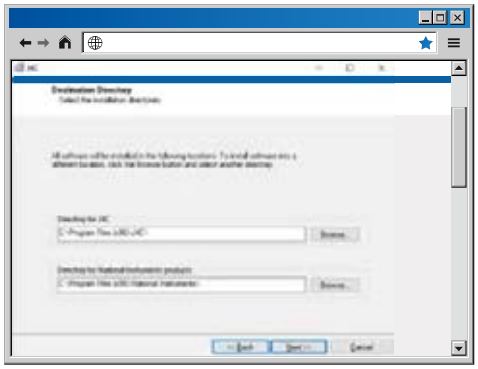

5.2 Click on “Next”

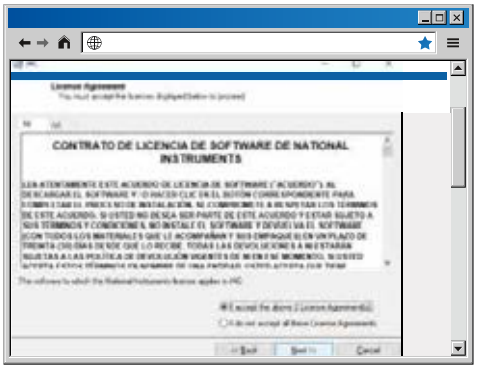

5.3 Click on “Next”

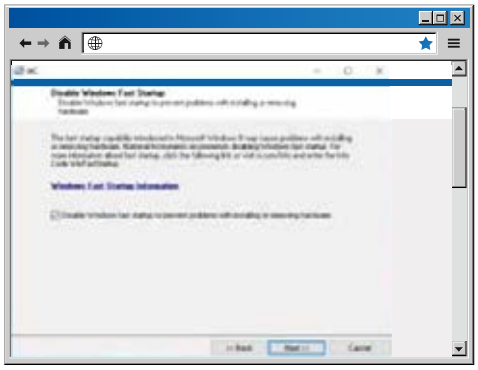

5.4 Click on “Next”

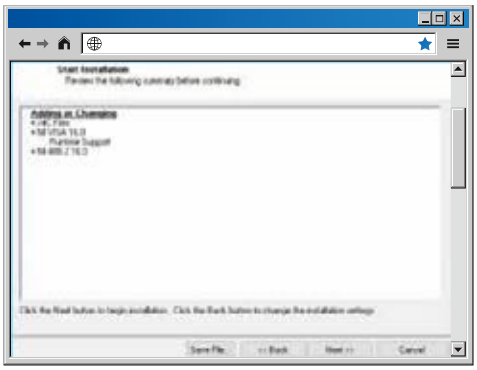

5.5 Click on “Next”

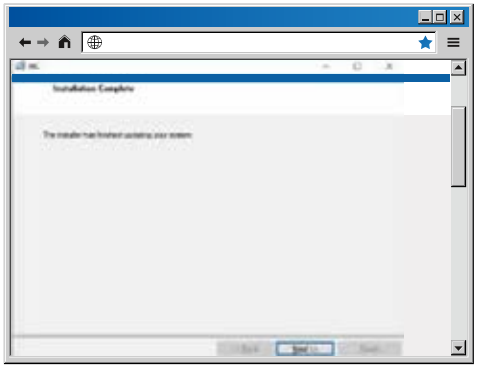

5.6 Cick on “Restart”

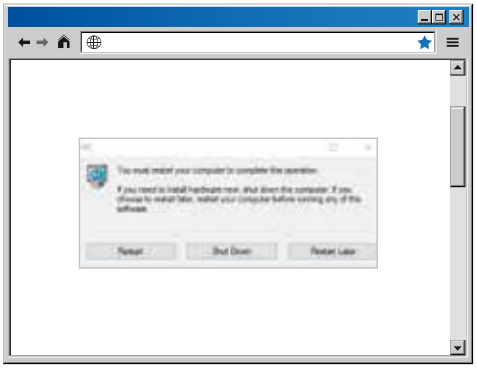

6 · The Program set-up is finished

7 · Go to “Inicio”, “Todas la aplicaciones” and in file

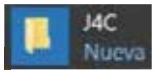

8 · Open

CONNECT THE INTERFACE CABLE TO THE J4C ELECTRIC ACTUATOR

KIT INTERFACE J4C

1 · Use the INTERFACE cable inside the KIT box.

2 · Before connecting it to a J4C actuator, remove the cover of the actuator and connect one of the Interface cable sides as per our (image 1). Then connect the other cable side to a USB connector on the PC (image 2).

Image 1

Image 2

INTERFACE PROGRAM - HOW IT WORKS?

INTERFACE PROGRAM FOR J4 Y J4C SERIES ACTUATORS ONLY.

1 · Open the program see the following screen

Two RED buttons appear on the screen.

Button 1 shows the USB Interface connector is not connected to the PC. It will change into GREEN color when it is connected.

Button 2 shows that the other side of the INTERFACE cable should be connected as per (image 1) as explained before. Connect it and apply voltage to the actuator, following the connection diagram label on the cover of the actuator. Button 2 should change into GREEN color.

To select the language, click on (CHANGE LENGUAGE), chose the language and click on CONTINUE.

If you click on **PARAMETERS**, the following screen will open, showing the actuator parameters, loaded during the mass production process.

Short explanation of each parameter:

Model: A 5 to 6-digit code. The last 3 digit show us the actuator model.

PCB Version: Is the software version of the PCB CONTROL part.

The rest of the parameter values, belong to a specific actuator model, in order to obtain the best working features of each one.

In case we should change any of the parameters, in order to be able to work in a different way, a new file would be sent to you. It should be copied on the PC, following the steps:

Press **SELEC CONFIG** - select the file on the screen.

Click on **PROGRAM**, the actuator would work with a new configuration.

To go back to the home menu, click on **MAIN MENU.**

If we click on **COUNTERS**, the following screen will open, showing all counters. To see values, click on **READ**.

Short explanation of each **COUNTER**:

Version: Software version of the PCB CONTROL part.

Options: Parameter for internal use only.

Operations: Number of times the cam steps on the OPEN or CLOSE micro switch.

Limitations: Number of times the limiter function has been activated, due to a higher torque than the allowed.

End Order: Parameter for internal use only.

Time Error: Number of times the motor has been stopped, as the TIEMPO DE MANIOBRA parameter value has been overpassed, but the actuator has not reached either the OPEN or CLOSE position yet. It usually happens when the declutching lever is in MAN position. (The user wants to move the actuator manually)

Power On: Number of times the actuator remains without Power Supply.

BSR: Number of times the actuator has been activated by using the BSR system, due to a Power Supply failure. This counter won't work if the BSR system has not been installed on the actuator before.

To go back to the MENU, click on **MAIN MENU**.

This configuration is possible only if our Positioner (DPS) has already been installed in the actuator.

Click on **DPS PARAM**, the following screen will open and allow you to set up the **Banda Prop** parameter.

The **Banda Prop** parameter should be **32** in all our standard models.

Only in case of a S20 or B20 model with a 5 Sec./90º working time, the **Banda Prop** value should change into **55**. Otherwise, the positioner (DPS) could not work in a proper way.

Click on **READ**, to see the recorded value.

Select **32** or **55** and record the selected value.

To go back to the HOME MENU, click on **MAIN MENU**.

This configuration is possible only if our Positioner (DPS) has already been installed in the actuator.

Click on **DPS**, if the following screen appears, please place the DIPs on the DPS PCB, following the screen instructions.

Click on **MAIN MENU**.

If we click on **DPS**, all the Positioner (DPS) possible configuration options will be shown on the following screen:

Short explanation of the different configurations:

Version: Is the software version of the **DPS** PCB.

Select different options when in OPERATION MODE:

INPUT/OUTPUT: The actuator with DPS will be positioned by using an external mA or V signal. Automatically the DPS will generate an output signal showing the actuator position.

ONLY OUTPUT: The actuator with DPS will work exactly the same as an ON-OFF one. The only difference is that the DPS generates an output mA or V signal, showing the actuator position.

STOP WITHOUT INSTRUMENTATION: The actuator is working the same way as when using the **INPUT/OUTPUT** option, but in case of a mA of V signal failure, the actuator would stop, remaining in the same position as it was, prior to the signal failure. This configuration is only available when the actuator works with a 4/20m, 1/10V, 4/12mA and 12/20mA signal.

Select configurations when in **IN SELECTION:**

Input Signal: Chose the type of requested signal. Both output and input signal will be the same. If you want to work with different signals, please ask the manufacturer.

NO / NC: In case of an input signal failure, the actuator will go to the preferential position: **NO** = Normally Open, **NC** = Normally Close.

We recommend that both the **input signal** and **NO/NC** set up, is made by placing the DIPs as follows:

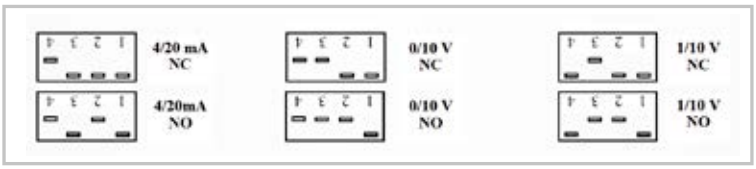

RESET: Click on **RESET** to fix the prior changes, after select any of the **INPUT SELECT** configurations.

SELFT ADJUST: If click on **SELF ADJUST** the actuator will make a complete movement, and register Open and Close positions.

Click on **READ** to know the DPS configuration (a table will show the DPS parameters).

To go back to the home menu, click on **MAIN MENU**.

REMOTE CONTROL options:

In case of an **ON-OFF or a DPS Output only actuator**, Click on **ABRIR**, **CERRAR** and **PARAR options** to activate it. Only in case of having a 3-position actuator, the screen will show an additional option **PUNTO MEDIO**, which stops the actuator at an intermediate position.

Click on **ACTUAL STATUS**, the screen will show the actuator status (green light).

Click on **MENÚ PRINCIPAL** to go back to the home menu.

Click on **POWER SUPPLY CONFIGURATIONS**, the screen will show electrical wiring/connection options:

Select the wiring connection system you wish to work with. Click on **STANDARD**, **NO**, **NC** or **NANO**.

See the detail of each connection system below.

To go back to the home menu, click on **MAIN MENÚ.**

To finish, click on **EXIT.**

BLUETOOTH & WIFI

communication BLUETOOTH

We have introduced the BLUETOOTH communication system in our actuators, in order to communicate with our actuators, from any **IOS or ANDROID** devices.

this system appears in our catalogue as a factory option.

From our mobile phone or tablet we could order our actuator to open/close or stop, we could be informed about errors or incidences, etc.

The communication between our devices is protected by a password.

Via BLUETOOTH we could identify and communicate with up to 50 devices within a max distance of 20m.

MODBUS system

· Plug and play.
· Each device could be operated manually.
· Could be seen from the cntrol panel, tablet, mobile, PC, either inside or outside of the plant.
· Fast and flexible, starting by 3 actuators up to 32
· Up to 1.200m distance range.
· Locally connect the device and communicate with a data cable.
· Could name the devices, make a plant synoptic, send alarm mails.

Wireless system

· Plug and play.
· Each device could be operated manually.
· Could be seen from the cntrol panel, tablet, mobile, PC, either inside or outside of the plant.
· Fast and flexible, starting by 3 actuators up to 32.
· From 50m up to 1.600m distance range without repeaters.
· Each device is emitting and receiving at the same time, creating a communication mesh, which enables the device to avoid walls or interferences.
· Under 802.15.4 protocol.
· Up to 12 bands of communication, wich allow a change of band is case of saturation.

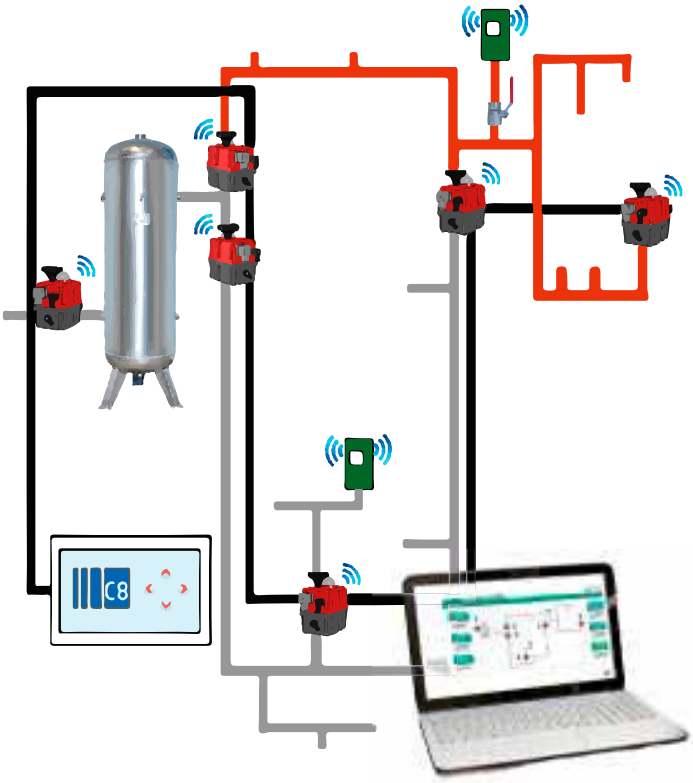

06 CERTIFICATIONS

· IP (Applus), ATEX (JM.Madariaga), EMS (LG Assaigs i Invest.)

· EMC

· Reach Certificate of Compliance

· Rohs Certificate of Compliance

· Certificados CE

· ISO 9001:2000

J.J. BCN INTERNACIONAL, S.A.
Poligono Industrial Sud
C/.De l´Orfeó Català, 7
E – 08440 Cardedeu (Barcelona)
0034938713304
0034938713272

Degrees of protection provided by enclosures (IP CODE)
IEC 60529:1989+AMD1:1999+AMD2:2013 CSV Consolidated version

For our electric actuators of the J4C series.
Type ranges: S20, S35, S55, S85, S140 and S300 – B20, B35, B55, B140 and B300.

In versions: standard, DPS, BSR, DPS + BSR, Pot.

J.J. BCN INTERNACIONAL S.A., as a manufacturer declares herewith, that the above-mentioned part-turn actuators meet the degrees of protection provided by enclosures (IP CODE): UNE 20324:1993 + 1M: 2000 + ERR: 2004 (EN 60529:1991 + ERR: 1993 + A1:2000).

The following harmonized standards have been applied:
UNE-EN 60529:2018

The manufacturer commits to submitting the documents to the competent national authority, via electronic transmission upon request.

The part turn actuators further comply with the requirements of the following directives and the respective approximation of national laws, as well as the respective harmonized standards as listed below:

(1) Degrees of protection provided by enclosures (IP CODE)
UNE-EN 60529:2018
IEC 60529:1989+AMD1:1999+AMD2:2013 CSV Consolidated version

IP	67

Cardedeu 2018-10-01

J. Chaves
Technical Manager

Esta declaración no supone ningún tipo de garantía. Se deben observar las instrucciones de seguridad de la documentación del producto suministrada. Esta declaración pierde su validez si en los equipos se realizan cambios no acordados con el fabricante.

J.J. BCN INTERNACIONAL, S.A.
Poligono Industrial Sud
C/.De l´Orfeó Català, 7
E – 08440 Cardedeu (Barcelona)
0034938713304

Original Declaration of Incorporation of Partly Completed Machinery (EC Directive 2006/42/EC) and EC Declaration of Conformity in compliance with the Directives on EMC and Low Voltage

For electric actuators of the series **J4C** type ranges:
S20, S35, S55, S85, S140, S300, B20, B35, B55, B85, B140 & B300

in versions: Standard, DPS, BSR, DPS + BSR, Poti

J.J. BCN INTERNACIONAL S.A. as manufacturer declares herewith, that the above-mentioned part-turn actuator meet the following basic requirements of the EC Machinery Directive 2006/42/EU: Annex I. articles
1.1.2, 1.1.3, 1.1.5, 1.2.1, 1.2.6, 1.3.1, 1.3.7, 1.5.1, 1.6.3, 1.7.1, 1.7.3, 1.7.4

The following harmonised standards within the meaning of the Machinary Directive have been applied:
EN 12100:2012 ISO 5211:2017
EN 60204 - 1:2006

With regard to the partly completed machinery, the manufacturer commits to submitting the documents to the competent national authority via electronic transmission upon request. The relevant technical documentation pertaining to the machinery described in Annex VII, part B has been prepared.

J+J part turn actuators are designed to be installed on industrial valves. J+J part turn actuators must not be put into service until the final machinery into which they are to be incorporated has been declared in conformity with the provisions of the EC Directive 2006/42/EC.

As partly completed machinery, the part turn actuators further comply with the requirements of the following directives and the respective approximation of national laws as well as the respective harmonised standards as listed below:

(1) Directive relating to Electromagnetic Compability (EMC) (2014/30/EU)
EN 61000-6-2: 2006 + E:2009
EN 61000-6-4: 2007 + E:+/A1:2011

(2) Low Voltage Directive (2014/35/EU)
EN 60204-1: 2007 + Corr:2010 Security
EN 50178: 1998

Year of affixing of the CE marking: 2008

Cardedeu 2018-10-01

J. Chaves
Technical Manager

This declaration does not contain any guarantees. The safety instructions in product documentation supplied with the devices must be observed. Non concerted of the devices voids this declaration.

September 2019.

REACH Certificate of Compliance

J.J. BCN INTERNACIONAL, S.A. is committed to manage the use of chemical substances in accordance with governmental regulations, industry standards, and customer-specific requirements in order to protect the environment.

We hereby certify that, no J.J. BCN INTERNACIONAL,S.A. products contain any of the Substances of Very High Concern (201 SVHC list released in June 2019) listed by the European Chemicals Agency (ECHA) under provisions of Regulation (EC) Nº 1907/2006 of the European Parliament, in a proportion higher than 0.1% of product weight per article.

Even though J.J. BCN INTERNACIONAL,S.A. does not supply neither substances, nor preparation as they are concerned, but supplies finished product , is adhered to article 7.

Nevertheless, we understand our commitment with the protection of the environment and, due to this fact we have informed our suppliers about their responsibilities and have required their own REACH Certificates, when applicable.

Quality Dep.

J.J. BCN INTERNACIONAL.S.A.
Pol. Ind. Sud.
C/ de l'Orfeó Català, nº 7
08440 – CARDEDEU
BARCELONA
Tel. +34 938 713 304
Fax. +34 938 713 272

RoHS CERTIFICATE OF COMPLIANCE

The undersigned:

J.J. BCN INTERNACIONAL, S.A.
Orfeó Català, 7
08440 Cardedeu (Spain)

And on behalf:

Jorge Chaves García
Technical Manager

DECLARES: Under its exclusive responsibility that:

The J4C ELECTRIC ACTUATORS series
Manufactured by: J.J. BCN INTERNACIONAL, S.A.
In: Spain
Model: S20, S35, S55, S85, S140, S300, B20, B35, B55, B85, B140 & B300
Options: DPS, BSR, DPS+BSR & POT

Accomplishes with the following requirements:

EC directive 2015/863/EU (the RoHS Directive):

The maximum concentration value of the restricted substances by weight is:

Lead (Pb) ……..... < 0.1%

Mercury (Hg) ……..... < 0.1%

Hexavalent Chromium (Cr VI) ……... < 0.1%

Polybrominated Biphenyls (PBB)……... < 0.1%

Polybrominated Diphenyl Ethers (PBDE)..... < 0.1%

Cadmium (Cd) …….. < 0.01%

Bis(2-Ethylhexyl) phthalate (DEHP)……... < 0.1%

Benzyl butyl phthalate (BBP) ……..……... < 0.1%

Dibutyl phthalate (DBP) ……..……... < 0.1%

Diisobutyl phthalate (DIBP) ……... < 0.1%

Cardedeu, September 2019

J.Chaves
Technical Manager

telpro CE

DIGITAL COPY

Laboratorio de Ensayos, marcado CE

Test Laboratory, CE mark

Marca: Brand:	J+J
Modelo: Model:	J4 - J4C :: S140/300
Descripción: Description:	Electric actuator
Directivas: Directives:	2014/35 /UE (LVD) Low Voltage Directive 2014/30/UE (E. M. C.)
Ensayos y medidas. Norma: Tests and measurements. Standard:	UNE-EN 60204-1:2007+Corr:2010 UNE-EN 61000-6-2:2006+E:2009 UNE-EN 61000-6-4:2007 +E:2008+/A1:2011

Resultado en el informe de los ensayos Nº.: Show in summary in test report Nº.:	2018-04-002

Verificado: Verified:	V

Fecha (DD-MM-AAAA): Date(DD-MM-YYYY):	04-04-2018

Sello de la compañía y firma: Company seal and signature: F. J. García. Ing. T. Telecom. General manager.	laboratorio de ensayos telpro www.elmarcado

QMS SPAIN

REGISTRO ISO 9001

Este documento certifica que el Sistema de gestión de la calidad de:

J.J. BCN INTERNACIONAL, S.A.

C/ De l'Orfeó Català, 7 (P.I. Sud)

08440; CARDEDEU (Barcelona)

ESPAÑA

Ha sido evaluado y aprobado por QMS SPAIN en relación al sistema de gestión de la calidad según normas y directrices:

ISO 9001:2015

El sistema de gestión de la calidad aprobado se aplica al siguiente alcance:

FABRICACIÓN, COMERCIALIZACIÓN Y ASISTENCIA TÉCNICA DE ACTUADORES PARA VÁLVULAS

Aprobación original: 03/09/2001

Certificado actual: 06/09/2018

Caducidad del certificado: 06/09/2021

Número de certificado: 14127433

ASCB Accreditation Services Worldwide

Este certificado será válido mientras el titular mantenga su sistema de gestión de acuerdo con la norma publicada.
Para validar y comprobar el estado de sus certificados por favor envíe un email a
calidad@qms-spain.com
Este certificado es propiedad de QMS Spain y debe ser devuelto en el momento de la cancelación.

En nombre de QMS Spain

Este certificado será válido mientras el titular mantenga su sistema de gestión de acuerdo con la norma publicada.
Para validar y comprobar el estado de sus certificados por favor envíe un email a
calidad@qms-spain.com
Este certificado es propiedad de QMS Spain y debe ser devuelto en el momento de la cancelación.

07 GUARANTEE

J+J actuators are warranted against defects of workmanship or assembly as follows:
J4C S/B Series: up to 60.000 working cycles or 3 years from their shipment date.
Working conditions of a 75% of duty. Max number of 50 limiter function activations, within 3 years of the warranty period.

OUR WARRANTY INCLUDES SOLELY AND EXCLUSIVELY THE REPAIR OR REPLACEMENT OF THE DEFECTIVE PARTS IN OUR WORKSHOP OR IN THE PLACEMENT OF THE INSTALLATION, AND DOES NOT COVER INDEMNIFICATIONS OR OTHER EXPENSES.

The warranty will be void if the device has been open, if the defects are the result of the misuse or if our products have been handled, repaired or modified outside our workshop or have been installed with materials or by methods not in accordance with our STANDARDS.
The party alleging the existence of a defect of workmanship shall accredit the suitable use of the product and, if appropriate the correct installation of the same.
The expenses of the return and reshipment of the defective materials will be for the account of the buyer.

11 CONTACT

J.J. BCN INTERNACIONAL, SA

Polígon Industrial Sud
Carrer de l'Orfeó Català, 7 • 08440 Cardedeu
Barcelona (Spain)

(+34) 93 871 33 04

info@jjbcn.com

www.jjbcn.com